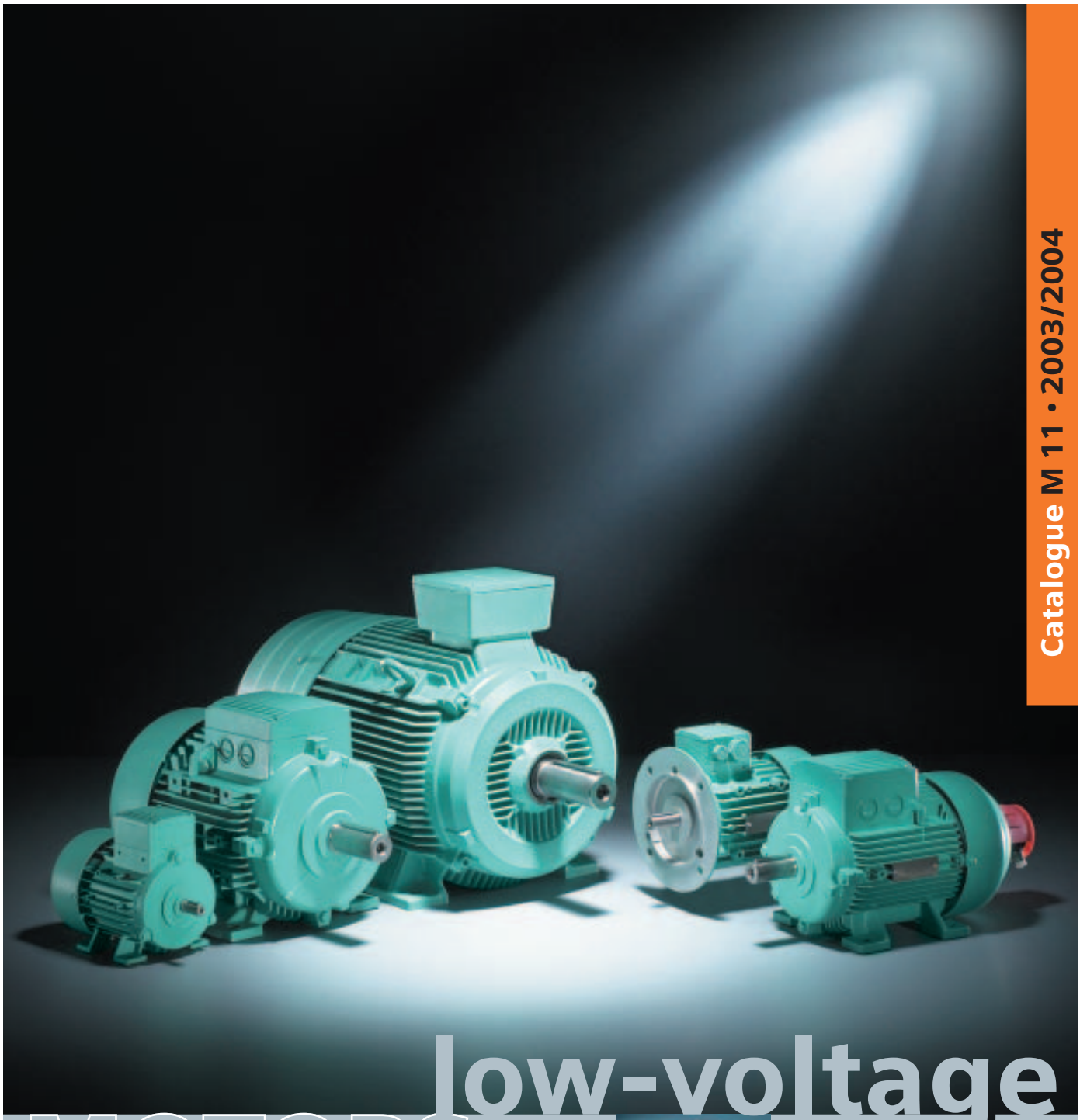

Catalogue M 11 • 2003/2004

low-voltage MOTORS

Squirrel-Cage Motors
Sizes 56 to 450
Output 0.06 kW to 1000 kW

SIEMENS

Other catalogues for "Standard Drives"

MICROMASTER DA 51.2
MICROMASTER 410/420/430/440
Inverters

Order No.:
German: E86060-K5151-A121-A4
English: E86060-K5151-A121-A4-7600

MICROMASTER/COMBIMASTER DA 51.3
MICROMASTER 411 Inverters
Distributed Drive Solutions
COMBIMASTER 411
Order No.:
German: E86060-K5251-A131-A2
English: E86060-K5251-A131-A2-7600

SIVOLT A/V DA 68
Alternating current and three-phase current controller
(available only in German)

Order No.:
German: E20002-K4068-A101-A1

Components for automation CA 01

Order No.:
German: E86060-D4001-A100-C1
English: E86060-D4001-A110-C1-7600

A&D Mall

Internet
http://www.siemens.com/automation/mall

Catalogue CA 01 – SD configurator selection aid

In future the **SD configurator** selection aid will be available in combination with the CA 01 electronic catalogue and no longer on a separate CD.

On CD 2 of the selection and configuration aids you will find the SD configurator for low-voltage motors, MICROMASTER 4 inverters and SINAMICS G110 including:

- Dimension drawing generator for motors
- Data sheet generator for motors
- Starting calculation
- 3D models in .stp format
- Extensive documentation

Hardware and software requirements

- PC with Pentium II or comparable processor
- Operating systems
  – Windows 98/ME
  – Windows 2000
  – Windows XP
  – Windows NT
  (Service Pack 5 upwards)
- Minimum of 128 RAM
- 1024 x 768 graphics with more than 256 colors / small fonts
- CD-ROM drive
- Windows-compatible sound card
- Windows-compatible mouse

Installation

You can install this catalogue directly from the CD-ROM as a complete or partial version on your hard disk or in the network.

Hotline:

For technical advice and hotline support concerning our CA 01 catalogue:

Tel.: +49 (0) 180 50 50 22 2

E-mail: adsupport@siemens.com

Trademarks

® COMBIMASTER, DURIGNIT, ECOFAST, LOGO!, MICROMASTER, SIMATIC, SIMOTION and SIMOVERT are registered trademarks of Siemens.

Other names in this catalogue may be trademarks which, if used by third parties for their own purposes, may violate the rights of the trademark owner.

Low-Voltage Motors

Catalogue M 11 2003/2004

Supersedes:
Catalogue M 11 · 2002/2003

The products in this catalogue are also included in the CD-ROM catalogue CA 01
Order No.:
E86060-D4001-A110-C1-7600

Contact your local Siemens representative for further information

© Siemens AG 2003

The products and systems described in this catalogue are manufactured under application of a certified quality management system in accordance with DIN EN ISO 9001 (Certificate Registration No. DE-000357 QM). The certificate is recognized in all IQNet countries.

SIEMENS

Selection and ordering data

Introduction 1

Technical information 2

1LA and 1LG squirrel-cage motors 3

1MA squirrel-cage motors
Increased safety
EEx e II type of protection 4

1MJ squirrel-cage motors
Explosion-proof enclosure
EEx de IIC type of protection 5

Squirrel-cage motors
Sector solutions 6

Dimensions 7

Accessories and repair parts 8

Appendix A

Welcome to Automation and Drives

We would like to welcome you to Automation and Drives and our comprehensive range of products, systems, solutions and services for production and process automation and building technology worldwide.

With integrated automation blocks, powerful engineering tools and innovative concepts such as Totally Integrated Automation and Totally Integrated Power, we deliver solution platforms based on standards that offer you a considerable savings potential.

Discover the world of our technology now. If you need more detailed information, please contact one of your regional Siemens partners.
They will be glad to assist you.

Squirrel-cage motors
Introduction

Technology that demonstrates expertise

Whatever your drive application is, motors from Siemens are sure to suit your drive system concept!

And should you ever experience a drive problem, whether large or small, we will work out the optimal solution with you.

The advantages of our motors:

- Optimum drive solutions for almost every sector
- Internationally recognized market leading technology
- The simple, rugged construction of the components guarantees an extremely long service life
- Certified quality "DIN EN ISO 9001"
- Worldwide operation thanks to compliance with national (DIN/VDE) and international standards (IEC/EN)
- Development and production with materials in accordance with the Siemens standard SN 36 350 for environmentally compatible products
- Environmentally friendly production technology
- Highly qualified engineering advice – locally – thanks to our global sales network
- Worldwide service
- High-speed logistics system
- 50,000 standard motors always in stock

Low-voltage motors, surface air cooled, IP55 degree of protection

- The "modular installation concept" with rotary pulse encoder, separately driven fan and brake makes special designs superfluous. This mounting technology makes the 1LA standard motors, quick, easy and economical to use in any application. The "modular installation concept" reduces costs for installation, commissioning and stock keeping (for further details, see "Modular technology" in Section 2 "Technical information").

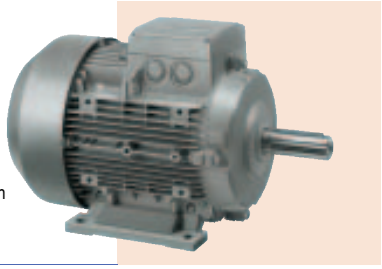

Basic version

Energy-saving motors eff1, eff2, EPACT pole-changing

For converter-fed operation

1LA and 1LG, see Section 3

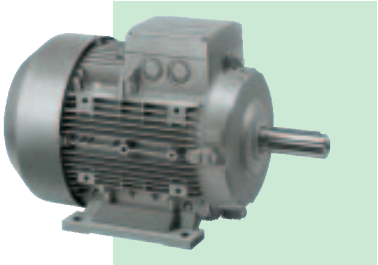

Increased safety

EEx e II type of protection

1MA see Section 4

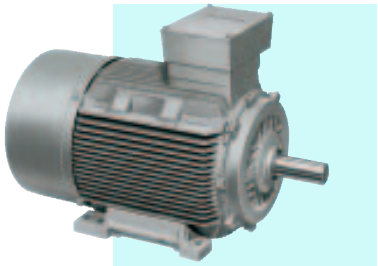

Explosion-proof enclosure

EEx de IIC type of protection

1MJ see Section 5

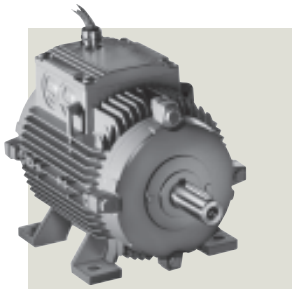

Sector solutions

Smoke extraction motors, marine motors

See Section 6

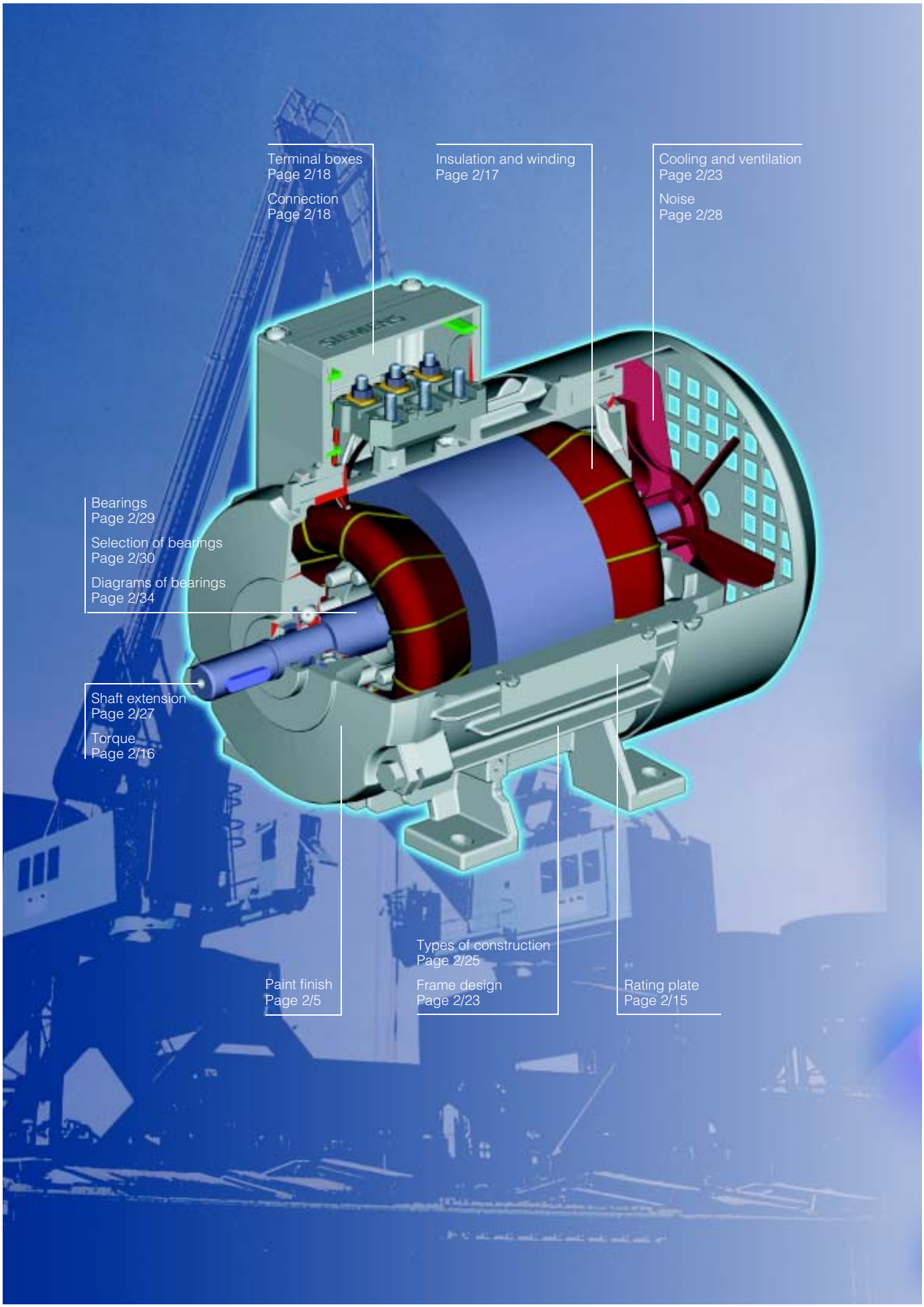
Terminal boxes
Page 2/18
Connection
Page 2/18
Insulation and winding
Page 2/17
Cooling and ventilation
Page 2/23
Noise
Page 2/28
Bearings
Page 2/29
Selection of bearings
Page 2/30
Diagrams of bearings
Page 2/34
Shaft extension
Page 2/27
Torque
Page 2/16
Paint finish
Page 2/5
Types of construction
Page 2/25
Frame design
Page 2/23
Rating plate
Page 2/15

Squirrel-cage motors
Technical information

2

General information
2/2 Order number
2/5 Paint finish and packaging
2/6 Project planning aids

Standards, specifications and tolerances
2/7 Applicable standards and specifications, national regulations, tolerances for electrical specifications, export of low-voltage motors to China
2/8 Energy-saving motors with European efficiency classification in accordance with EU/CEMEP
2/8 Motors for the North American market
2/9 Design and certification of explosion-proof motors in accordance with directive 94/9/EC (ATEX)
2/9 VIK design

Electrical design
2/10 Voltages, currents, and frequencies
2/13 Rated outputs and rating plates
2/16 Efficiency, power factor, and rated torque
2/17 Insulation, winding, motor protection, and anti-condensation heating
2/18 Connection, switching, and terminal boxes

Mechanical design
2/23 Frame design
2/23 Degrees of protection
2/23 Cooling and ventilation
2/23 Coupling to gearboxes
2/24 Eyebolts
2/24 Speed and direction of rotation
2/25 Types of construction
2/27 Shaft extensions
2/27 Balance and vibration severity
2/28 Noise (mains-fed operation)
2/29 Bearings
2/36 Maximum cantilever forces
2/40 Maximum axial load

Converter-fed operation
2/44 Motor temperature detection
2/44 Insulation
2/44 Connection of the motors
2/44 Ventilation/noise
2/44 Mechanical stress, grease life
2/44 Bearings
2/45 Mechanical limit speeds

Distributed drive systems
2/46 MICROMASTER® 411/COMBIMASTER® 411
2/46 ECOFAST®
2/47 MICROSTARTER

Modular technology
2/48 Rotary pulse encoder
2/49 Separately driven fan
2/50 Brakes
2/56 Dimensions and weight

2/58 **Further mountings for 1LA/1LG motors**

General information

2

Order number

		1	2	3	4	5	6	7	–	8	9	10	11	12	–	Z

1st to 3rd position (number, letter, letter)

Surface cooled squirrel-cage motor, degree of protection IP55	Single-speed, pole-changing, Aluminum and cast iron design			
	Improved efficiency eff2			
	High efficiency eff1	**1**	**L**	**A**
	Increased power rating, converter-fed operation	**1**	**L**	**G**
	Increased safety, EEx e II type of protection	**1**	**M**	**A**
	Explosion-proof enclosure, EEx de IIC type of protection	**1**	**M**	**J**
4th position (number)	Type series			
5th to 7th position (numbers)	Motor frame size, coded from 56 to 450			
8th position (number)	Number of poles			
9th and 10th position (letters)	Design			
11th position (number)	Voltage, connections and frequency			
12th position (number)	Type of construction			
Special designs	Please state in plain text or Order code			

Ordering example

Three-phase motor IP55

4-pole, 50 Hz, 45 kW, 230 V△/400 V⋎, IM V 5 type of construction with canopy

Special designs:
- 3 PTC thermistors
- Separately mounted fan

Order No.	**1LA5223–4AA. .**	
Voltage identifier	–	**1**
Type of construction identifier	–	**9**
Special designs		**–Z**
IM V 5 type of construction with canopy		**M1F**
3 PTC thermistors		**A11**
Separately mounted fan		**G17**
In order, specify:	**1LA5223–4AA19–Z M1F + A11 + G17**	

Order number (continued)

Overview of "Special designs"

The order codes for the individual motors can be found in the "Selection and ordering data".

Order code	Special designs	For detailed information see Page
Windings and motor protection		
A10	Motor protection with PTC thermistors for converter-fed operation with three embedded temperature sensors for alarm in zones	2/17, 2/44
A11	Motor protection with PTC thermistors with three embedded temperature sensors for tripping	2/17, 2/18, 2/47
A12	Motor protection with PTC thermistors with six embedded temperature sensors for alarm and tripping	2/17
A15	Motor protection with PTC thermistors for converter-fed operation with three embedded temperature sensors for tripping	2/17
A16	Motor protection with PTC thermistors for converter-fed operation with six embedded temperature sensors for alarm and tripping	2/17
A23	Motor temperature detection with embedded temperature sensor KTY 84-130	2/44
A25	Motor temperature detection with embedded temperature sensors 2 x KTY 84-130	2/44
A60	Installation of 3 PT 100 G resistance thermometers	–
A61	Installation of 6 PT 100 G resistance thermometers	–
A72	Installation of 2 PT 100 screw-in resistance thermometers (basic circuit) for rolling-contact bearings	–
C11	Used acc. to temp. class F (up to CT 40 °C) with service factor	2/17, 2/44
C12	Used acc. to temp. class F (up to CT 40 °C) with increased power rating	2/17, 2/44
C13	Used acc. to temp. class F with increased coolant temperature	2/17, 2/44
Y52	Used acc. to temp. class F – other requirements	2/17
Paint finish		
K23	Unpainted (only cast iron parts primed)	2/5
K24	Unpainted, only primed	2/5
K26	Special paintwork in RAL 7030 stone grey	2/5
K27	Special paintwork in RAL 6011 mignonette green	2/5
K28	Special paintwork in RAL 7031 bluish grey	2/5
L42	Special paintwork in RAL 7032 pebble grey	2/5
L43	Special paintwork in RAL 9005 jet black	2/5
M16	Special paintwork in RAL 1002 sand yellow	2/5
M17	Special paintwork in RAL 1013 pearl white	2/5
M18	Special paintwork in RAL 3000 flame red	2/5
M19	Special paintwork in RAL 6021 pale green	2/5
M20	Special paintwork in RAL 7001 silver grey	2/5
M21	Special paintwork in RAL 7035 light grey	2/5
M22	Special paintwork in RAL 9001 cream	2/5
M23	Special paintwork in RAL 9002 grey white	2/5
Y54	Special paintwork in other colors: RAL	2/5
Y53	Normal paint finish in other colors: RAL	2/5

Order code	Special designs	For detailed information see Page
Design for zones in accordance with ATEX		
M34	Version for Zone 21 for mains-fed operation	2/9
M35	Version for Zone 22 for mains-fed operation	2/9
M38	Version for Zone 21 for converter-fed operation	2/9
M39	Version for Zone 22 for converter-fed operation	2/9
M72	Version for Zone 2 for mains-fed operation EEx nA II T3 acc. to EN 50 021, Ex nA II T3 acc. to IEC 60 079-15	2/9
M73	Version for Zone 2 for converter-fed operation EEx nA II T3 acc. to EN 50 021, Ex nA II T3 acc. to IEC 60 079-15	2/9
Distributed drive systems		
G55	ECOFAST motor plug Han-Drive 10e for 230 VΔ/400 VY	2/46
G56	ECOFAST motor plug, EMC resistant, Han Drive 10e, 230 VΔ/400 VY	2/46
H90	MICROSTARTER – direct on-line starter with 24 V DC control with metric M25 cable entries	2/47
H91	MICROSTARTER – direct on-line starter with 24 V DC control, with HAN Q8 plug connectors	2/47
H92	MICROSTARTER – direct on-line starter with AS-Interface connection, with metric M25 cable entries	2/47
H93	MICROSTARTER – direct on-line starter with AS-Interface connection, with HAN Q8 plug connectors (ECOFAST)	2/47
H94	MICROSTARTER – reversing starter with AS-Interface connection, with metric M25 cable entries	2/47
H95	MICROSTARTER – reversing starter with AS-Interface connection, with HAN Q8 plug connector (ECOFAST)	2/47
Marine version – "Operation under deck"		
E00	Not certified, to ABS 50 °C/CCS 45 °C/RINA 45 °C temperature class F used acc. to F	6/2
E11	Certified according to GL (Germanischer Lloyd) Germany, CT 45 °C, temperature class F used acc. to F	6/2
E21	Certified according to LRS (Lloyds Register of Shipping), Great Britain, CT 45 °C, temperature class F used acc. to F	6/2
E31	Certified according to BV (Bureau Veritas), France CT 45 °C, temperature class F used acc. to F	6/2
E51	Certified according to DNV (Det Norske Veritas), Norway, CT 45 °C, temperature class F used acc. to F	6/2
E61	Certified according to ABS (American Bureau of Shipping), USA, CT 50 °C, temperature class F used acc. to F	6/2
E71	Certified according to CCS (Chinese Classification Society), China, CT 45 °C, temperature class F used acc. to F	6/2
E80	Motor for use in shipping, higher ambient temperature and/or used as F in accordance with B	6/3

Order number (continued)

Overview of "Special designs" (continued)

The Order Codes for the individual motors can be found in the "Selection and ordering data".

Order code	Special designs	For detailed information see Page
Modular technology		
C00	Brake supply voltage 24 V DC	2/50, 2/54
C01	Brake supply voltage 400 V AC, 50 Hz	2/50, 2/54
G17	Mounting of separately driven fan	from 2/44, from 2/56
G26	Mounting of brake	from 2/50
H57	Mounting of 1XP8 001-1 (HTL) rotary pulse encoder	from 2/47, from 2/56
H58	Mounting of 1XP8 001-2 (TTL) rotary pulse encoder	2/47, 2/48, from 2/56
H61	Mounting of separately driven fan and 1XP8 001-1 rotary pulse encoder	from 2/47, from 2/56
H62	Mounting of brake and 1XP8 001-1 rotary pulse encoder	2/48, 2/51, from 2/56
H63	Mounting of brake and separately driven fan	2/49, 2/51, from 2/56
H64	Mounting of brake, separately driven fan, and 1XP8 001-1 rotary pulse encoder	2/48, from 2/56
H97	Mounting of separately driven fan and 1XP8 001–2 rotary pulse encoder	from 2/48 2/56
H98	Mounting of brake and 1XP8 001–2 rotary pulse encoder	from 2/48 2/56
H99	Mounting of brake, separately driven fan and 1XP8 001–2 rotary pulse encoder	from 2/48 2/56
K82	Manual brake release with lever	2/50, 2/51, 2/54
Further mountings		
H70	Mounting of LL861 900 220 rotary pulse encoder	from 2/56
H71	Mounting of LL861 900 220 rotary pulse encoder to be provided	from 2/57
H72	Mounting of HOG 9 D 1024 I rotary pulse encoder	from 2/56
H73	Mounting of HOG 10 D 1024 I rotary pulse encoder	from 2/56
H74	Mounting of HOG 9 rotary pulse encoder to be provided	2/57, 2/59
H75	Mounting of HOG 10 rotary pulse encoder to be provided	2/57, 2/59
H78	Prepared for mounting of LL861 900 220 rotary pulse encoder	2/58
H79	Prepared for mounting of HOG 9 D 1024 I rotary pulse encoder	2/59
H80	Prepared for mounting of HOG 10 D 1024 I rotary pulse encoder	2/59
Y70	Mounting of rotary pulse encoder in special design	–
Converter installation		
H15	Prepared for mounting of the MMI	2/44, 2/46
Mechanical design		
D01	CCC China Compulsory Certification	2/7
D02	Coolant temperature –50 °C to 40 °C	2/14, 2/15
D03	Coolant temperature –40 °C to 40 °C	2/14, 2/15
D04	Coolant temperature –30 °C to 40 °C	2/14, 2/15
D30	Electrical acc. to NEMA MG1-12	2/8, 2/47
D31	Design according to UL with "recognition mark"	2/8, 2/47
D40	Canadian regulations (CSA)	2/8, 2/47
K01	Vibration severity grade R	2/27, 2/47
K06	Two-part plate on terminal box	2/20
K09	Terminal box on RHS (view onto drive end)	2/24

Order code	Special designs	For detailed information see Page
Mechanical design (continued)		
K10	Terminal box on LHS (view onto drive end)	2/19, 2/24
K11	Terminal box on top, feet screwed on	2/24
K16	Second standard shaft-end	from 2/25, 2/47
K17	Drive-end seal for flange-mounting motors	2/23, 2/47
K20	Bearings for increased cantilever forces	2/29, 2/31, from 2/37, 2/47
K30	VIK design	2/9, 2/47
K31	Extra rating plate, loose	2/15, 2/47
K32	With two additional lifting rings for IM V 1/IM V 3	2/25
K36	Special bearing for drive end and non-drive end, bearing size 63	2/29 – 2/37
K37	Low-noise design for 2-pole motors with clockwise direction of rotation	2/9, 2/28
K38	Low-noise design for 2-pole motors with anticlockwise direction of rotation	2/9, 2/28
K40	Regreasing device	from 2/29, 2/47
K45	Anti-condensation heating for 230 V	2/17
K46	Anti-condensation heating for 115 V	2/17
K50	IP65 degree of protection	–
K83	Rotation of terminal box by 90°, inserted from drive end	2/18 – 2/22
K84	Rotation of terminal box by 90°, inserted from non-drive end	2/18 – 2/22
K85	Rotation of terminal box by 180°	2/18 – 2/22
K94	Located bearing drive end	2/29 – 2/35, 2/47
L03	Vibration-proof version	–
L04	Located bearing non-drive end	2/29 – 2/35, 2/47
L13	External earthing	2/18, 2/47
L27	Insulated bearing cartridge	2/44
L36	Sheet metal fan cover	–
L51	Protruding cable ends - right side	–
L52	Protruding cable ends - left side	–
L68	Full-key balancing	–
L99	Wire-lattice pallet	2/5, 2/47
M44	Earth brushes for converter-fed operation	–
M46	Bolt-type screw terminal for cable connection, accessories pack (3 units)	–
M47	Saddle terminals for connection without cable lug	–
Y82	Extra rating plate	2/15, 2/47
Notes on safety and commissioning/certification		
B00	Without S&C note. Customer's declaration of renouncement required	–
B01	Complete with one set of safety and commissioning notes per wire-lattice pallet	–
B02	Factory test certificate 2.3 acc. to EN 10 204	6/3

Paint finish and packaging

Paint finish

Design	Suitability of paint finish for climate group in accordance with DIN IEC 60 721, Part 2 – 1		
Standard finish	**Moderate** (extended) for indoors and outdoors	Short per.: Contin.:	up to 120 °C up to 100 °C
Special finish	**Worldwide** (global) for outdoors Suitable for use in the tropics for max. 60% relative humidity at 40 °C	Short per.: Contin.: Also:	up to 140 °C up to 120 °C for aggressive atmospheres up to 1 % acid and alkali concentration or permanent dampness in sheltered rooms

For 1LA5, 1LA6, 1LA7, 1LA9, and 1MA7 as well as for 1MA6/1MJ6 motors up to frame size 200 L, the special paint is standard.

For very corrosive environments, the 1LA8, 1LG4 and 1LG6 motors can be painted with off-shore paint CERAMKOTE 54® (only on request).

All motors can be painted over with commercially available paints.

When no color is specified, all motors are painted in the color RAL 7030.

Special paint with increased layer thickness available on request.

Packing weights and dimensions

Packing weights

For motors		For land transport					
Size	Type	Size IM B 3			Type of construction IM B 5, IM V 1		
	1LA5 . . ./1LA7 . . ., 1LA6 . . ., 1LA9 . . ., 1LG4 . . ., 1LG6 . . ., 1MA6 . . ., 1MA7 . . ., 1MJ6 . . ., 1MJ7 . . .	in cartons tare kg	on battens tare kg	in crates tare kg	in cartons tare kg	on battens tare kg	in crates tare kg
56 M	. . . . 050/053	0.65	–	–	0.65	–	–
63 M	. . . . 060/063	0.65	–	–	0.65	–	–
71 M	. . . . 070 073	0.65	–	–	0.65	–	–
80 M	. . . . 080 083	0.65	–	–	0.65	–	–
90 S 90 L	. . . . 090 . . . . 096/097	0.65	–	–	0.65	–	–
100 L	. . . . 106/107	1.3	–	–	1.3	–	–
112 M	 113	1.5	–	–	1.5	–	–
132 S 132 M	. . . . 130/131 . . . . 133/134	4.7	–	–	5.2	–	–
160 M 160 L	. . . . 163/164 166	4.8	–	–	5.7	–	–
180 M 180 L	. . . . 183 186	13.0	–	–	13.4	–	–
200 L	. . . . 206/207	13.5	–	–	13.5	–	–
225 S 225 M	. . . . 220 223	13.7	7	20	13.7	10	20
250 M	 253	–	20	36	–	20	40
280 S 280 M	. . . . 280 283	–	20	36	–	20	40
315 S 315 M 315 L	. . . . 310 . . . . 313 . . . . 316/317/318	–	20 22	38 40	–	20 22	45

Values for type 1MJ1/1MJ8 motors on request.

The figures apply to individual packing. For frame sizes 56 to 180 L, wire-lattice pallets can be used, order code **L99**.

Packing weights and dimensions for 1LA8 motors

For motors		Packing weights			
Size	Type	Land transport on battens		Sea transport in wooden cases	
	1LA8 . . .	Size IM B 3 tare kg	Type IM V 1 tare kg	Size IM B 3 tare kg	Type IM V 1 tare kg
315	. . . . 315/317	30	55	270	310
355	. . . . 353/355/357	40	65	320	365
400	. . . . 403/405/407	45	75	390	445
450	. . . . 453/455/457	50	85	450	510
Maximum motor dimensions		Allowances for maximum motor dimensions (packing dimensions = motor dimensions + allowance)			
		Land transport on battens		Sea transport in wooden cases	
		Size IM B 3 approx. mm	Type IM V 1 approx. mm	Size IM B 3 approx. mm	Type IM V 1 approx. mm
Length		+250	+250	+250	+250
Width		+200	+300	+200	+200
Height		+200	+250	+500	+500

General information

2

Project planning aids

SD configurator (on CD2 "Configuration" of catalogue "CA 01 – the Siemens A&D Offline Mall")

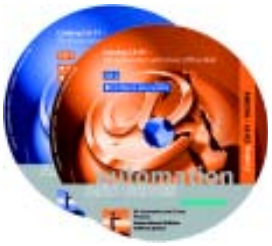

More than 100,000 products with approx. 5 million possible product variants for drive engineering applications are listed in the interactive catalog **CA 01 – the Offline Mall** of Siemens Automation and Drives (A&D).

To make the selection of the suitable motor and/or inverter from the diverse A&D SD range easier, the **SD configurator** has been developed which is integrated into the catalogue as a "selection aid".

The **SD configurator** makes it easier to find the right drive solution. In addition to the correct order number, it also supplies the corresponding documentation.

It can be used to display operating instructions, factory test certificates, and terminal box documentations etc. as well as to generate data sheets, dimension drawings, and start-up calculations for the corresponding products.

It is also easy to assign a suitable inverter to the selected motor.

The extensive help function does not only explain the program functions, but also contains extensive technical background material.

SD configurator product range:
Low-voltage motors (energy-saving motors, explosion-proof motors) with corresponding documentation and dimension drawings, low-voltage inverters of the MICROMASTER 4 product series, SINAMICS G110 inverter chassis units, and much more.

The interactive CA 01 Catalogue can be ordered from your local Siemens sales representative or on the Internet under

http://www.siemens.com/automation/CA01

Under this address you can also find links to tips, tricks, and downloads for functional updates and documentation.

Order number for the CA 01 10/2003 English:

E86060-D4001-A110-C1-7600

Energy-saving program
This energy-saving program has been developed so that the energy-saving potential can be utilized simply, quickly, and practically. The tool offers versatile user interfaces for calculating the individual energy-savings for Siemens energy-saving motors of the highest eff1 efficiency class. With this extraordinary tool it is even possible to plan entire plants with eff1 energy-saving motors for purposes of comparison.

The individual fields of application are as follows:
Case 1
Calculation of the energy-savings as well as the amortization time for the additional cost of the Siemens eff1 energy-saving motor as compared with the Siemens eff2 energy-saving motor.

In this case, the motor data for the Siemens energy-saving motors as well as their order numbers have already been stored. In addition, you are told how long it will take until the additional cost for an energy-saving motor will pay for itself.

Case 2
Calculation of the energy-savings as well as the amortization time for the additional cost of the Siemens eff1 energy-saving motor as compared with other known motors.

The calculation, however, requires exact knowledge about the technical data of the motor which is to be used for the comparison.

Case 3
Calculation of the energy-savings as well as the amortization time for the additional cost of the Siemens eff1 energy-saving motor as compared with any number of other known motors – plant analysis.

This offers an optimal basis for making a decision when it comes to finding the most cost-effective solution. The total power factor and the total reactive power are also indicated in this case.

Internet: http://www.siemens.com/energysavingprogram

Order number of the CD-ROM 04/2002 German/English:
E80001-D40-P220-X-7400

Useful Internet links

Converters:
http://www.siemens.com/micromaster

Distributed drive systems:
http://www.siemens.com/combimaster

Geared motors:
http://www.siemens.com/gearedmotors

ECOFAST:
http://www.siemens.com/ecofast

Motors:
http://www.siemens.com/motors

Newsletter:
http://my.ad.siemens.com/myAnD/

Applicable standards and specifications

The motors comply with various standards and regulations, especially with those in the table opposite.

Title	IEC	DIN/EN
General regulations for rotating electrical machines	IEC 60 034-1, IEC 60 085	DIN EN 60 034-1
AC induction motors for general use with standardized dimensions and power	IEC 60 072 fixing only	DIN EN 50 347
Restart characteristics, rotating electrical machines	IEC 60 034-12	DIN EN 60 034-12
Terminal markings and direction of rotation, rotating electrical machines	IEC 60 034-8	DIN EN 60 034-8
Designation for type of construction, installation and terminal box position	IEC 60 034-7	DIN EN 60 034-7
Entry to terminal box	–	prDIN 42 925 (08/99)
Built-in thermal protection	IEC 60 034-11	–
Noise limits for rotating electrical machines	IEC 60 034-9	DIN EN 60 034-9
IEC standard voltages	IEC 60 038	DIN IEC 60 038
Cooling methods for rotating electrical machines	IEC 60 034-6	DIN EN 60 034-6
Mechanical vibrations, rotating electrical machines	IEC 60 034-14	DIN EN 60 034-14
Vibration limits	–	DIN ISO 10 816
Degrees of protection for rotating electrical machines	IEC 60 034-5	DIN EN 60 034-5
In addition, the following applies to EEx motors:		
General regulations	IEC 60 079-0	DIN EN 50 014
Explosion-proof enclosure "d"	IEC 60 079-1	DIN EN 50 018
Increased safety "e"	IEC 60 079-7	DIN EN 50 019
Type of protection "n" (non-sparking)	IEC 60 079-15	DIN EN 50 021

National standards

The motors comply with the applicable IEC or European standards listed above. The European standards replace the national standards in the following European member states: Germany (VDE), France (NF C), Belgium (NBNC), Great Britain (BS), Italy (CEI), Netherlands (NEN), Sweden (SS), Switzerland (SEV) etc.

The motors also comply with various national standards.

The following standards have been harmonized with IEC publication 60 034-1 or replaced by EN 60 034-1 so that the motors can be operated with the standard rated output.

Explosion-proof motors:

- Since these correspond with European standards EN 50 014, EN 50 018, EN 50 019, and directive 94/9/EU (ATEX), test certificates issued by authorized testing agencies (PTB, DMT, etc.) are accepted by all member states of the EU. The remaining members of the CENELEC also accept the certificates, including Switzerland and the Czech Republic.

AS 1359	Australia (higher rated output assignment than stated in DIN EN 50347 for frame size 250 M or larger)
CSA C22.2, No. 100	Canada
IS 325 IS 4722	India
NEK – IEC 60 034-1	Norway

Electrical tolerances

The following tolerances are permitted according to DIN EN 60 034:
Motors which comply with DIN EN 60034-1 must have a voltage tolerance of ± 5%/frequency tolerance ± 2% (Design A).

The tolerance of ± 5% according to DIN EN 60034-1 also applies to the rated voltage range. If utilized, the permitted limit temperature of the temperature class may be exceeded by 10 K.

Efficiency for
$P_N \leq 50$ kW: $-0.15 \cdot (1-\eta)$
$P_N > 50$ kW: $-0.1 \cdot (1-\eta)$

with η being a decimal number.

Power factor $-\frac{1-\cos\varphi}{6}$

- Minimum absolute value: 0.02
- Maximum absolute value: 0.07

Slip	±20% [1]
Locked-rotor current	+20%
Locked-rotor torque	–15% to +25%
Breakdown torque	–10%
Moment of inertia	±10%

1MA motors:

Add 10 % to the certified values for the locked-rotor current.

Export of low-voltage motors to China

CCC - China Compulsory Certification - Order Code D01

"Small power motors" which are exported to China must be certified up to a rated output of:
2-pole: ≤ 2.2 kW
4-pole: ≤ 1.1 kW
6-pole: ≤ 0.75 kW
8-pole: ≤ 0.55 kW

The **motors 1LA7, 1LA9, 1MA7 and 1MJ6 which must be certified** have been certified by the CQC (China Quality Cert. Centre). When ordered with Order Code **D01**, the logo "CCC" and "Factory Code" is on the rating plate and packing.

A005216

Factory Code:

A005216 = Works Bad Neustadt

A010607 = Works Mohelnice

Note:
Chinese customs checks the need for certification of imported products by means of commodity code.
The following do not need to be certified:
– Motors imported to China which have already been installed into a machine.
– Repair parts.

1) For motors <1 kW ±30 % is permitted.

Standards, specifications, and tolerances

Energy-saving motors with European efficiency classification in accordance with EU/CEMEP [1])

Two and four pole low-voltage motors in the power range of 1.1 to 90 kW are marked with the efficiency class EFF2 (Improved Efficiency) or EFF1 (High Efficiency) in accordance with the EU/CEMEP agreement.

So that the requirements of the efficiency classes EFF1 and EFF2 are fulfilled, the active parts of the motor have been optimized.

The procedure for calculating the efficiency is based on the loss-summation method according to IEC 60034-2.

Motors for the North American market

For motors which comply with North American regulations (NEMA, CSA, UL, etc.) it must always be checked whether the motors will be used in the U.S. or Canada and whether they are subject to state laws.

Minimum efficiencies required by law

In 1997, an act was passed in the U.S. to define minimum efficiencies for low-voltage three-phase motors (EPACT) [2]). In Canada there is an act which is largely identical, although it is based on different verification methods. The efficiency of these motors is verified for the U.S. using IEEE 112, test method B, and for Canada using CSA-C390. Apart from a few exceptions, all low-voltage three-phase motors exported to the U.S. or Canada must comply with legal requirements on efficiency.
The act requires minimum efficiencies for 2, 4, and 6-pole motors with a voltage of 230 and 460 V / 60 Hz in the power range of 1 to 200 HP (0.75 to 160 kW). Explosion-proof motors must also be included. 1LA9 and 1LG6 are also available in the design for zones 2, 21, and 22. According to EPACT, the following are excluded from the efficiency requirements, for example:

- Motors whose frame size output classification does not correspond with the standard series according to NEMA MG1-12.
- Flange-mounting motors
- Asynchronous brake motors
- Converter-fed motors
- Motors with design letter C and higher

Further information on EPACT: ***http://www.eren.doe.gov/***

Particulars of the U.S. Energy Policy Act

The act lays down that the nominal efficiency at full load and a CC number (Compliance Certification) must be included on the rating plate. The CC number is issued by the U.S. Department of Energy (DOE). The following information is stamped on the rating plate of EPACT motors which must be marked by law: Nominal efficiency, design letter, code letter, CONT, CC no. CC 032A (Siemens) and NEMA MG1-12.

Special requirements for Canada: CSA – Energy Efficiency Verification

These motors fulfill the efficiency requirements laid down by the CSA standard C390. These motors are available as 1LA9 or 1LG6 and can be ordered with order code **D40** and also include the CSA-E energy verification mark.

NEMA – Order Code D30

The motors with increased efficiency according to EPACT are designed to meet the NEMA MG1-12 electrical standard, and are marked accordingly. The mechanical design of all motors is compliant only to IEC, not to NEMA dimensions.
All motors of design **D30** correspond to NEMA Design A (i.e. standard torque characteristic in accordance with NEMA and no starting current limitation). For Design B, C, and D, the special design is required (on request). According to NEC-ANSI-C1, Division 2, Class I and II, Group A, B, and D, all 1LA/1LG motors that match Zone 2 can be used. All other 1LA/1LG motors must be ordered with order code **D30**.
Data on the rating plate: Rated voltage (voltage tolerance of ±10 %), nominal efficiency, design letter, code letter, CONT and NEMA MG1-12.

UL Approval – Order Code D31 [3])

The motors based on the basic series 1LA/1LG are listed for up to 600 V by Underwriters Laboratories Inc. ("Recognition Mark" = R/C).
The motors must be ordered with the code **D31**, voltage code **"9"** and the code for voltage and frequency [4]). The "UL Recognition Mark" is included on the rating plate of the motor.

In addition, the motor is designed to meet the NEMA MG1-12 electrical standard. The following data is included on the rating plate: Rated voltage (voltage tolerance of ±10%), nominal efficiency, design letter, code letter, CONT, and NEMA MG1-12.
Externally or internally mounted components such as
– Motor protection
– Heating element
– Forced ventilation
– Brake
– Encoder
– Power terminal
– Plug connector
– MICROSTARTER
are UL-R/C, CSA-C, and US-listed or used by manufacturers in accordance with regulations. It may have to be decided whether the motor is suitable for the application.
The motors can be operated with a frequency converter – separate converter or built-on (**1UA.**/order code **H15**) – at 50/60 Hz.
Deviating frequency settings must be tested at final acceptance.

CSA Approval – Order Code D40 [3])

The motors based on the basic series 1LA/1LG are approved for up to 690 V in accordance with the Canadian regulations of the Canadian Standard Association (CSA). Built-on or built-in components which are used are listed by CSA or are used by the manufacturers in accordance with regulations. It may have to decided whether the motor is suitable for the application.

The motors must be ordered with the code **D40**, voltage code **"9"** and the code for voltage and frequency. The CSA sign and the rated current (voltage tolerance of ±10%) are included on the rating plate.

When energy-saving motors (1LA9, 1LG6) are ordered, they also include the CSA-E energy verification mark on the rating plate.

1) CEMEP = European Committee of Manufacturers of Electrical Machines and Power Electronics.
2) Energy Policy Act
3) No approval for Zones 2, 21, 22 and EEx e- or EEx de-motors.
4) According to UL, motor voltages up to 600 V are certified. For this reason, voltage code "6", for example, is omitted (400 VΔ / 690 VY/50 Hz or 460 VΔ /60 Hz). Voltages 400 VΔ and 460 VΔ must be ordered as follows:

Voltage	Voltage code
400 VΔ /50 Hz or 460 VΔ /60 Hz (50 Hz rating)	9 with L1U
460 VΔ /60 Hz (50 Hz rating)	9 with L2T
460 VΔ /60 Hz (60 Hz rating)	9 with L2F

Design and certification of explosion-proof motors in accordance with directive 94/9/EC (ATEX)

Use of 1LA/1LG motors in hazardous areas (type of protection "n") [1]

Zone 2 according to EN 50021/ IEC 60079-15

M72 Mains-fed operation

M73 Converter-fed operation

The 1LA/1LG motors are suitable for use in hazardous areas of Zone 2 for temperature classes T1 to T3. The maximum surface temperature during service must be less than the temperature limit for the particular temperature class.
The ventilation system must comply with DIN EN 50 014.

Use in accordance with class F on request.

The motors are fitted with an external earthing terminal.

The design of the terminal box is similar to EExe.

Vertical mounted motors with the shaft extension pointing downwards must be provided with a canopy.

Motors designed for type of protection "n" (Zone 2; Category 3 according to ATEX) bear a declaration of EC conformity which the manufacturer issues at his own discretion.

Ambient temperature -20 °C to +40 °C. Deviating temperatures on request.

The rating plate or the supplementary rating plate is stamped with:
Ex II 3G
EEx nA II T3 acc. to EN 50021
Ex nA II T3 acc. to IEC 60079-15.

The rating plates of the motors are not marked with a rated voltage range.
Converter-fed operation:
The standard requires that the motor and converter are tested as a unit. An inquiry is therefore necessary (extra cost).
When ordering 1LA8 motors it is necessary to specify in the E line whether a constant torque or pump and fan drive is required.
The 1LA and 1LG motors are fitted with PTC thermistor detectors. 1LG4 and 1LG6 motors are fitted with an additional PTC thermistor in the terminal box.
For some motors, the speed limit must be reduced and metal fans used.

Zone 21 according to IEC 61 241/EN 50 281

M34 Mains-fed operation

M38 Converter-fed operation

Zone 22 according to IEC 61 241/EN 50 281

M35 Mains-fed operation

M39 Converter-fed operation

The 1LA/1LG motors are suitable for use in areas with danger of dust explosions if various precautions are taken. Surface temperatures may not exceed 125 °C during normal operation.
The version for conducting dust, degree of protection IP65, is designed for Zone 21;
for non-conductive dust, degree of protection IP55, for Zone 22.

The motors are fitted with an external earthing terminal and with an external metal fan.

The design of the terminal box for Zone 21 is similar to EExe.

Certificates:
- EC type test certificate (ATEX), issued by the DMT (Deutsche Montan-Technologie) test centre for Zone 21.
- Declaration of EC conformity for Zone 22.

Marking on the rating plate:
Zone 21: Ex II 2D T125 °C
Zone 22: Ex II 3D T125 °C

For motors in Zones 2, 21, and 22, designs in accordance with UL (Order Code D31) and CSA (Order Code D40) cannot be supplied.
Pole-changing versions cannot be used for motors in Zone 21. Pole-changing versions for Zones 2 and 22 on request.

Type of protection EEx de IIC Explosion-proof enclosure "d" [1]

- All 1MJ motors are certified for the EEx de IIC type of protection.

  1MJ6, size 71M to 200L, 1MJ7, size 225 to 315M, 1MJ1 and 1MJ8 with EC type test certificate according to directive 94/9/EC (ATEX)

  The frames are designed to withstand internal explosion. An igniting flame to the outside is impossible. The frame temperature is less than the ignition temperature of the gases for temperature class T4.

  Temperature class T6 on request.

- The PTB certificate of conformity, which is valid up to temperature class T4, covers the following deviations: different coolant temperature (–20 °C to +60 °C), site altitude, frequency and rated duty type, pole-changing motors, fitting of temperature sensors and converter-fed operation with fitting of temperature sensors, design with explosion-proof terminal box, insulated bearing on non-drive end. Please inquire.

  Markings on the rating plate:
  Ex II 2G EEx de IIC or
  Ex II 2G EEx d II C

Type of protection EEx e II Increased safety "e" [1]

- The 1MA motors are certified for the EEx e II type of protection for temperature classes T1 to T3 and have an EC type test certificate in accordance with directive 94/9/EC (ATEX). Higher temperature classes are available on request.

  With the exception of 2-pole motors with frame size 225 M or larger, all motors are standard designs i.e. the motors are suitable for T1/T2 or T3 and can be operated with the corresponding rated output. A new or supplementary certificate may be needed for non-standard designs (different frequency, output, coolant temperature, site altitude etc.) (please inquire). It is essential for the temperature class to be specified because if not, the standard design for T1/T2 and T3 will be certified (double certification fee).

  Markings on the rating plate:
  Ex II 2G EEx e II T.

VIK design – Order code K30

Motors up to frame size 355 can be supplied in accordance with the "Technical Requirements" of VIK (Verband der Industriellen Energie- und Kraftwirtschaft).
Not possible for 1LA5 motors, 1LG4 motors are delivered.
A low-noise design is additionally required for all 2-pole 1LG4, 1MJ6, 1MJ7, and 1MA6 motors, frame sizes 315 S to 315 L, as well as for all 2-pole 1MJ8/1MJ1 motors (Order Code **K37** or **K38**). 1LG4, 1LG6, 1MJ6, and 1MJ7 motors are supplied with a special terminal box with a removable cable entry plate.

Take account of the rated-output classification and the dimensions of 1LA8 motors. The terminal box cannot be rotated by 4 x 90° for motors 1LA8, frame sizes 355 to 357.

Vertically mounted motors with shaft extension pointing downwards must be provided with a canopy (type of construction code e.g. 9 (M1F), 4).
Use acc. to class B is specified.
Frame sizes 400 and 450 are not available with the VIK design.
Converter-fed operation on request.

VIK design motors with external mountings (brake, rotary pulse encoder, separately driven fan, and anti-condensation heating) do not comply with Zone 2 according to VDE 0165. No version for Zones 21/22.

VIK design motors with metric screwed glands as cable entries are included in the scope of supply.

1) Ex-design motors (except for Zone 22) include certified metric glands in the scope of supply. No approval for UL/CSA.

Electrical features

Voltages, currents, and frequencies

Standard voltages
EN 60034-1 differentiates between Category A (combination of voltage deviation ± 5% and frequency deviation ± 2%) and Category B (combination of voltage deviation ± 10% and frequency deviation +3/–5%) for voltage and frequency fluctuations.
The motors can supply their rated torque in both Category A and Category B. In Category A, the temperature rise is approx. 10 K higher than during normal operation. According to the standard, longer operation is not recommended for Category B.

See page 2/15 for details of the rating plate inscriptions and examples. The selection and ordering data state the rated current at 400 V. DIN IEC 60 038 specifies a tolerance of ±10% for system voltages of 230 V, 400 V, and 690 V.
The rating plates of motors with voltage code 1 or 6 also include a rated current range in addition to the rated voltage (see table). The rated currents at 380 V and 420 V are listed in the table on page 2/12 and on the rating plate.

The tolerance laid down by DIN EN 60 034-1 applies to all converter-fed 1LA8 motors as well as to 1LA5, 1LA7, and 1LG6 motors with special 690 V insulation i.e. no rated voltage range is specified on the rating plate.
For 1LA and 1LG motors, type of protection "n" (Zone 2), no rated voltage range is specified either.

1MA motors:
For non-standard frequencies the t_E output values may differ from those stated in the selection tables; in this case, a new or supplementary certificate is needed. For Δ -connection, overload protection with phase-failure protection must be provided.

Standard voltages:

Voltages	Rated voltage range	Voltage code
1LA, 1LG, and 1MJ motors		
230 VΔ /400 VY, 50 Hz	220 – 240 VΔ /380 – 420 VY, 50 Hz	1
400 VΔ /690 VY, 50 Hz	380 – 420 VΔ /660 – 725 VY, 50 Hz	6
1LA and 1LG motors Second rating plate with 50 and 60 Hz data, frame sizes 56 to 315 M for 1LA9 and 1LG6 with output at 60 Hz additionally in HP		
460 V, 60 Hz	440 – 480 V, 60 Hz	1.6
1MA motors		
230 VΔ /400 VY, 50 Hz	218 – 242 VΔ /380 – 420 VY, 50 Hz	1
400 VΔ /690 VY, 50 Hz	380 – 420 VΔ /655 – 725 VY, 50 Hz	6

Voltages, currents, and frequencies (continued)

Non-standard voltages and/or frequencies

The tolerance laid down by DIN EN 60 034-1 applies to all non-standard voltages.
Order Codes have been allocated for a number of non-standard voltages at 50 and 60 Hz (**11th position of Order No. = 9**).

L1X■	Standard winding
L1Y■	Non-standard winding between 200 V and 690 V (other voltages to request)

When ordering state in plain text:
Voltage, frequency, connection, and required rated output in kW.

■ This Order Code only determines the price.

Order Codes for other rated voltages:

Voltage at **50 Hz**	Required output at **50 Hz**	Order Code for **50 Hz (single speed)** [1]	Frame sizes for motors 1LA5, 1LA7	1LA6, 1LA9	1LG4, 1LG6	1LA8	1MA6, 1MA7 [2]	1MJ6	1MJ7	1MJ8, 1MJ1
220 VΔ /380 VY (210 – 230 VΔ / 360 – 400 VY)	50 Hz output	**L1R**	56 – 225	56 – 200	180 – 315M	–	63 – 315L	71 – 200	225 – 315	–
380 VΔ /660 VY (360 – 400 VΔ / 625 – 695 VY)	50 Hz output	**L1L**	56 – 225	56 – 200	180 – 315L	–	63 – 315L	71 – 200	225 – 315	–
415 VY (395 – 435 VY)	50 Hz output	**L1C**	56 – 225	56 – 200	180 – 315M	–	63 – 315L	71 – 200	225 – 315	–
415 VΔ (395 – 435 VΔ)	50 Hz output	**L1D**	56 – 225	56 – 200	180 – 315L	–	63 – 315L	71 – 200	225 – 315	–
400 VΔ (460 VΔ bei 60 Hz) (380 – 420 VΔ)	50 Hz output	**L1U**	56 – 225	56 – 200	180 – 315L	–	–	–	–	–

Voltage at **60 Hz**	Required output at **60 Hz**	Order Code for **60 Hz (single speed)**	Frame sizes for motors 1LA5, 1LA7	1LA6, 1LA9	1LG4, 1LG6	1LA8	1MA6, 1MA7 [2]	1MJ6	1MJ7	1MJ8, 1MJ1
220 VΔ /380 VY	50 Hz output	**L2A**	56 – 225	56 – 200	180 – 315M	–	63 – 315L	71 – 200	225 – 315	–
220 VΔ /380 VY	60 Hz output	**L2B**	56 – 225	56 – 200	180 – 315M	–	–	71 – 200	225 – 280 S	315 – 450
380 VΔ /660 VY	50 Hz output	**L2C**	56 – 225	56 – 200	180 – 315L	315 – 450	63 – 315L	71 – 200	225 – 315	–
380 VΔ /660 VY	60 Hz output	**L2D**	56 – 225	56 – 200	180 – 315L	315 – 450	–	71 – 200	225 – 315	315 – 450
440 VY	50 Hz output	**L2Q**	56 – 225	56 – 200	180 – 315M	–	63 – 315L	71 – 200	225 – 315	–
440 VY	60 Hz output	**L2W**	56 – 225	56 – 200	180 – 315M	–	–	71 – 200	225 – 315	315 – 450
440 VΔ	50 Hz output	**L2R**	56 – 225	56 – 200	180 – 315L	315 – 450	63 – 315L	71 – 200	225 – 315	–
440 VΔ	60 Hz output	**L2X**	56 – 225	56 – 200	180 – 315L	315 – 450	–	71 – 200	225 – 315	315 – 450
460 VY	50 Hz output	**L2S**	56 – 225	56 – 200	180 – 315M	–	63 – 315L	71 – 200	225 – 315	–
460 VY	60 Hz output	**L2E**	56 – 225	56 – 200	180 – 315M	–	–	71 – 200	225 – 315	315 – 450
460 VΔ	50 Hz output	**L2T**	56 – 225	56 – 200	180 – 315L	315 – 450	63 – 315L	71 – 200	225 – 315	–
460 VΔ	60 Hz output	**L2F**	56 – 225	56 – 200	180 – 315L	315 – 450	–	71 – 200	225 – 315	315 – 450
575 VY	50 Hz output	**L2U**	56 – 225	56 – 200	180 – 315M	–	63 – 315L	71 – 200	225 – 315	–
575 VY	60 Hz output	**L2L**	56 – 225	56 – 200	180 – 315M	–	–	71 – 200	225 – 315	315 – 450
575 VΔ	50 Hz output	**L2V**	56 – 225	56 – 200	180 – 315L	315 – 450	63 – 315L	71 – 200	225 – 315	–
575 VΔ	60 Hz output	**L2M**	56 – 225	56 – 200	180 – 315L	315 – 450	–	71 – 200	225 – 315	315 – 450

Voltage at **60 Hz**	Required output at **60 Hz**	Order Code for **60 Hz (pole-changing)**	Frame sizes for motors 1LA5, 1LA7	1LA6, 1LA9	1LG4	1LA8	1MA6, 1MA7 [2]	1MJ6	1MJ7	1MJ8, 1MJ1
220 V	50 Hz output	**L4A**	63 – 200	–	180 – 280	–	–	–	–	–
220 V	60 Hz output	**L4B**	63 – 200	–	180 – 280	–	–	–	–	–
380 V	50 Hz output	**L4C**	63 – 200	–	180 – 280	–	–	–	–	–
380 V	60 Hz output	**L4D**	63 – 200	–	180 – 280	–	–	–	–	–
440 V	50 Hz output	**L4G**	63 – 200	–	180 – 280	–	–	–	–	–
440 V	60 Hz output	**L4E**	63 – 200	–	180 – 280	–	–	–	–	–
460 V	50 Hz output	**L4J**	63 – 200	–	180 – 280	–	–	–	–	–
460 V	60 Hz output	**L4H**	63 – 200	–	180 – 280	–	–	–	–	–
575 V	50 Hz output	**L4N**	63 – 200	–	180 – 280	–	–	–	–	–
575 V	60 Hz output	**L4M**	63 – 200	–	180 – 280	–	–	–	–	–

1) For Order Codes **L1C**, **L1D**, **L1L**, **L1R** and **L1U**, the rating plate also contains a rated voltage range.

2) Requires special certificate.

Electrical features

2

Voltages, currents, and frequencies (continued)

Rated currents for the rated voltage range from 380 V to 420 V at 50 Hz

	Currents for voltage and number of poles							
	380 V 2-pole	420 V	380 V 4-pole	420 V	380 V 6-pole	420 V	380 V 8-pole	420 V
	A	A	A	A	A	A	A	A
1LA7, 1LA5 motors								
1LA7 050	0.27	0.26	0.21	0.21	–	–	–	–
1LA7 053	0.33	0.32	0.30	0.31	–	–	–	–
1LA7 060	0.52	0.53	0.42	0.44	–	–	–	–
1LA7 063	0.68	0.70	0.56	0.57	0.48	0.5	–	–
1LA7 070	1.05	1.02	0.80	0.77	0.66	0.64	0.36	0.36
1LA7 073	1.38	1.41	1.07	1.06	0.80	0.80	0.51	0.52
1LA7 080	1.75	1.79	1.50	1.50	1.18	1.25	0.73	0.80
1LA7 083	2.45	2.50	1.90	1.92	1.62	1.66	1.01	1.10
1LA7 090	3.40	3.35	2.60	2.60	2.10	2.15	1.15	1.18
1LA7 096	4.70	4.65	3.50	3.50	3.0	2.95	1.63	1.60
1LA7 106	6.25	6.15	4.8	4.8	4.0	4.1	2.25	2.2
1LA7 107	–	–	6.5	6.8	–	–	3.0	3.0
1LA7 113	8.2	7.7	8.4	8.3	5.4	5.3	4.1	4.2
1LA7 130	10.6	10.4	11.4	11.9	7.3	7.5	5.9	6.0
1LA7 131	14.1	13.8	–	–	–	–	–	–
1LA7 133	–	–	15.4	15.5	9.5	9.7	7.9	7.9
1LA7 134	–	–	–	–	13.0	13.1	–	–
1LA7 163	21.0	20.5	22.3	21.5	17.5	17.3	9.9	10.6
1LA7 164	28.0	26.0	–	–	–	–	13.1	13.4
1LA7 166	34.0	32.0	29.5	28.5	24.8	24.7	17.6	18.4
1LA5 183	40	38	36	35	–	–	–	–
1LA5 186	–	–	42	41	32.7	31	26.5	23.5
1LA5 206	55	52	–	–	40	38.5	–	–
1LA5 207	67	64	57	54	46.5	45.5	34	31
1LA5 220	–	–	69	64	–	–	40	37
1LA5 223	81	76	84	78	64	63	47	43
1LA6, 1LG4 motors								
1LA6 106	6.25	6.15	4.8	4.8	4.0	4.1	2.25	2.2
1LA6 107	–	–	6.5	6.8	–	–	3.0	3.0
1LA6 113	8.2	7.7	8.4	8.3	5.4	5.3	4.1	4.2
1LA6 130	10.6	10.4	11.4	11.9	7.3	7.5	5.9	6.0
1LA6 131	14.1	13.8	–	–	–	–	–	–
1LA6 133	–	–	15.4	15.5	9.5	9.7	7.9	7.9
1LA6 134	–	–	–	–	13.0	13.1	–	–
1LA6 163	21.0	20.5	22.3	21.5	17.5	17.3	9.9	10.6
1LA6 164	28.0	26.0	–	–	–	–	13.1	13.4
1LA6 166	34.0	32.0	29.5	28.5	24.8	24.7	17.6	18.4
1LG4 183	41.5	40	36	35	–	–	–	–
1LG4 186	–	–	42.5	41.5	30.5	28.5	25.5	25
1LG4 188	56	54	59	60	38.5	37	34.5	34.5
1LG4 206	56	52	–	–	37	37	–	–
1LG4 207	67	63	57	55	45	42.5	33.5	32
1LG4 208	82	77	70	69	61	60	40.5	39
1LG4 220	–	–	72	65	–	–	40.5	36.5
1LG4 223	83	75	85	77	60	54	46.5	42
1LG4 228	100	90	104	94	73	66	64	58
1LG4 253	100	93	104	98	73	68	60	57
1LG4 258	134	128	138	134	87	81	73	69
1LG4 280	136	126	144	132	87	80	76	70
1LG4 283	162	150	168	156	106	97	92	84
1LG4 288	196	182	204	190	146	134	112	102
1LG4 310	198	188	205	194	142	136	110	104
1LG4 313	230	215	245	230	170	162	146	136
1LG4 316	280	255	295	275	205	190	174	164
1LG4 317	345	315	360	330	245	225	210	198
1LG4 318	–	–	–	–	295	275	250	240

Voltages, currents, and frequencies (continued)

Rated currents for the rated voltage range from 380 V to 420 V at 50 Hz (continued)

	Currents for voltage and number of poles							
	380 V 2-pole	420 V	380 V 4-pole	420 V	380 V 6-pole	420 V	380 V 8-pole	420 V
	A	A	A	A	A	A	A	A
1LG6, 1LA8 motors								
1LG6 183	40.5	37.5	36	34.5	–	–	–	–
1LG6 186	–	–	42.5	40.5	30.5	29	24.5	23
1LG6 206	54	51	–	–	37	35.5	–	–
1LG6 207	66	62	56	54	44	40.5	32.5	30.5
1LG6 220	–	–	70	64	–	–	38	34.5
1LG6 223	81	73	84	76	59	53	45	41
1LG6 253	97	90	99	94	72	67	59	55
1LG6 280	134	124	138	128	85	79	75	69
1LG6 283	158	146	166	154	104	96	91	83
1LG6 310	192	174	200	184	142	134	106	100
1LG6 313	230	210	235	215	166	156	142	136
1LG6 316	275	250	285	265	205	190	170	158
1LG6 317	340	305	355	330	245	225	205	194
1LG6 318	–	–	–	–	290	275	250	230
1LA8 315	435	400	450	425	360	340	310	295
1LA8 317	540	495	560	530	450	420	385	365
1LA8 353	620	570	640	590	–	–	–	–
1LA8 355	690	630	720	680	570	530	480	455
1LA8 357	860	790	880	820	720	670	600	560
1LA8 403	950	880	990	930	810	760	680	640
1LA8 405	1080	990	1100	1040	890	840	760	720
1LA8 407	690 [1])	640 [2])	710 [1])	670 [2])	1000	940	850	810
1LA8 453	780 [1])	730 [2])	810 [1])	750 [2])	1160	1060	960	910
1LA8 455	880 [1])	810 [2])	910 [1])	860 [2])	740 [1])	690 [2])	1080	1020
1LA8 457	970 [1])	890 [2])	1000 [1])	940 [2])	830 [1])	770 [2])	1200	1140

The rating plates of 1MJ6 motors specify the maximum current in the voltage range in addition to the rated current. This maximum is approx. 5% higher than the rated current.

Rated outputs and rating plates

Table of rated output at 60 Hz for single-speed motors

Motor type			Maximum output at 60 Hz for voltages between 220 V or 380 V and 725 V			
			2-pole	4-pole	6-pole	8-pole
			kW	kW	kW	kW
1LA6, 1LG4, 1LG6, 1LA7, 1MJ6, 1MJ7 motors						
1LA7 050	**–**	**–**	0.105	0.07	–	–
1LA7 053	**–**	**–**	0.14	0.105	–	–
1LA7 060	**–**	**–**	0.21	0.14	–	–
1LA7 063	**–**	**–**	0.29	0.21	0.1	–
1LA7 070	**–**	**1MJ6 070**	0.43	0.29	0.21	0.1
1LA7 073	**–**	**1MJ6 073**	0.63	0.43	0.29	0.14
1LA7 080	**–**	**1MJ6 080**	0.86	0.63	0.43	0.21
1LA7 083	**–**	**1MJ6 083**	1.3	0.86	0.63	0.29
1LA7 090	**–**	**1MJ6 096**	1.75	1.3	0.86	0.43
1LA7 096	**–**	**1MJ6 097**	2.55	1.75	1.3	0.63
1LA7 106	**1LA6 106**	**1MJ6 106**	3.45	2.55	1.75	0.86
1LA7 107	**1LA6 107**	**1MJ6 107**	–	3.45	–	1.3
1LA7 113	**1LA6 113**	**1MJ6 113**	4.6	4.6	2.55	1.75
1LA7 130	**1LA6 130**	**1MJ6 130**	6.3	6.3	3.45	2.55
1LA7 131	**1LA6 131**	**1MJ6 131**	8.6	–	–	–
1LA7 133	**1LA6 133**	**1MJ6 133**	–	8.6	4.6	3.45
1LA7 134	**1LA6 134**	**1MJ6 134**	–	–	6.3	–
1LA7 163	**1LA6 163**	**1MJ6 163**	12.6	12.6	8.6	4.6
1LA7 164	**1LA6 164**	**1MJ6 164**	17.3	–	–	6.3

Motor type			Maximum output at 60 Hz for voltages between 220 V or 380 V and 725 V			
			2-pole	4-pole	6-pole	8-pole
			kW	kW	kW	kW
1LA6, 1LG4, 1LG6, 1LA7, 1MJ6, 1MJ7 motors (continued)						
1LA7 166	**1LA6 166**	**1MJ6 166**	21.3	17.3	12.6	8.6
1LA5 183	**1LG . 183**	**1MJ6 183**	24.5	21.3	–	–
1LA5 186	**1LG . 186**	**1MJ6 186**	–	25.3	18	13.2
–	**1LG . 188**	**–**	33.5	34.5	22	18
1LA5 206	**1LG . 206**	**1MJ6 206**	33.5	–	22	–
1LA5 207	**1LG . 207**	**1MJ6 207**	41.5	34.5	26.5	18
–	**1LG . 208**	**–**	51	42.5	36	22
1LA5 220	**1LG . 220**	**1MJ7 220**	–	42.5	–	22
1LA5 223	**1LG . 223**	**1MJ7 223**	51	52	36	26.5
–	**1LG . 228**	**–**	62	63	44.5	36
–	**1LG . 253**	**1MJ7 253**	62	63	44.5	36
–	**1LG . 258**	**–**	84	86	54	44.5
–	**1LG . 280**	**1MJ7 280**	84	86	54	44.5
–	**1LG . 283**	**1MJ7 283**	101	104	66	54
–	**1LG . 288**	**–**	123	127	90	66
–	**1LG . 310**	**1MJ7 310**	123	127	90	66
–	**1LG . 313**	**1MJ7 313**	148	152	108	90
–	**1LG . 316**	**–**	180	184	132	108
–	**1LG . 317**	**–**	224	230	158	132
–	**1LG . 318**	**–**	–	–	192	158

Speed increases to approx. 120% in relation to 50 Hz motors.

1) Current at 690 V.

2) Current at 725 V.

Rated outputs and rating plates (continued)

Table of rated output at 60 Hz for single-speed motors (continued)

Motor type	Maximum output at 60 Hz for voltages between 220 V or 380 V and 725 V			
	2-pole kW	4-pole kW	6-pole kW	8-pole kW
1LA8, 1MJ8, 1MJ1 motors				
1LA8 315 –	280	288	230	184
1LA8 317 –	353	362	288	230
1LA8 353 –	398	408	–	–
1LA8 355 –	448	460	362	288
1LA8 357 –	560	575	460	362
1LA8 403 –	616	644	518	408
1LA8 405 –	693	725	575	460
1LA8 407 –	781	817	644	518
1LA8 453 –	–	920	725	575
1LA8 455 –	–	1040	817	644
1LA8 457 –	–	1150	920	725

Motor type	Maximum output at 60 Hz for voltages between 220 V or 380 V and 725 V			
	2-pole kW	4-pole kW	6-pole kW	8-pole kW
1MJ8, 1MJ1 motors (continued)				
– 1MJ8 313	190	180	132	100
– 1MJ8 314	–	–	145	120
– 1MJ8 316	240	220	175	145
– 1MJ8 353	280	250	225	180
– 1MJ8 354	–	280	–	–
– 1MJ8 356	350	315	280	225
– 1MJ8 357	–	355	–	–
1MJ1 353		400	On request	On request
1MJ1 355	400	450		
1MJ1 357	450	500		
1MJ1 403	500	560		
1MJ1 405	560	630		
1MJ1 407	630	710		
1MJ1 453	on request	800		
1MJ1 455		900 [1])		
1MJ1 457		1000 [1])		
1MJ1 458		–		

Table of rated output at 60 Hz for pole-changing motors

For 60 Hz, the rated output values can be increased using the correction factors in the table opposite.

The output is increased for each pole number separately i.e. for 6-/4-pole motors with frame sizes 180 to 315, 60 Hz, the 6-pole output can be increased by 20%, the 4-pole power by 15%.

Size	Number of poles	Correction factor for 60 Hz output for voltages between 220 V or 380 V and 725 V
56 to 160	2 to 8	1.15
180 to 315	2	1.12
	4	1.15
	6 and 8	1.2

Possible combinations of 2-pole motors

Size	**Horizontal motor**				**Vertical motor**	
	50 Hz with foot	60 Hz with foot	50 Hz with flange	60 Hz with flange	50 Hz	60 Hz
56 to 315 M	●	●	●	●	●	●
315 L	●	●	–	–	●	On request
315	●	●	–	–	●	●
355 and 400	●	●	–	–	●	–
450	●	–	–	–	●	–

Coolant temperature and altitude above sea level

The rated output refers to continuous duty according to DIN EN 60 034-1 at a frequency of 50 Hz, a coolant temperature (CT) of 40 °C and a site altitude of up to 1000 m above sea level (ASL).

The motors are designed for class F and used in class B. If the actual operating conditions deviate from this class, the maximum output should be adjusted according to the following tables.
If explosion-proof motors are to be utilized at coolant temperatures that deviate from 40 °C and which have a site altitude greater than 1000 m above sea level the corresponding correction factors must be requested.

The Order Codes **D02**, **D03** and **D04** only apply to motors 1LG4 and 1LG6. 1LA7 motors on request.

Altitude above sea level **ASL** in m	Coolant temperature in °C <30	30 – 40	45	50	55	60
1000	**1.07**	**1.00**	**0.96**	**0.92**	**0.87**	**0.82**
1500	1.04	0.97	0.93	0.89	0.84	0.79
2000	1.00	0.94	0.90	0.86	0.82	0.77
2500	0.96	0.90	0.86	0.83	0.78	0.74
3000	0.92	0.86	0.82	0.79	0.75	0.70
3500	0.88	0.82	0.79	0.75	0.71	0.67
4000	0.82	0.77	0.74	0.71	0.67	0.63

The coolant temperature and the altitude are rounded to the nearest 5 °C or 500 m.

1) Only available as 690 V.

Rated outputs and rating plates (continued)

Coolant temperature and altitude above sea level (continued)

- Effective values, which must be stated when ordering, have been calculated for the following output ratings and coolant temperatures (CT) of 45 °C and 50 °C.
- For changes in the output rating with class F utilization see "DURIGNIT IR 2000 insulation".

If utilized according to temperature class B, motors intended for coolant temperatures other than 40 °C or altitudes greater than 1000 m above sea level must always be ordered with the suffix **"–Z"** added to the Order No. and the requirement stated in plain text.

Additional derating of the output will result in a deterioration in performance due to the lower utilization factor of the motors.

Rated output	Maximum output at 50 Hz at CT 45 °C	at CT 50 °C
kW	kW	kW
11	10.5	10
15	14.5	13.8
18.5	17.8	17
22	21	20
30	29	27.5
37	35.5	34
45	43	41.5
55	53	51
75	72	69
90	86	83
110	106	101
132	127	122
145	139	133
160	153	147
180	173	166
200	192	184
250	240	230
280	269	258
315	302	290
355	340	325
400	384	368
450	432	414
500	480	460
560	538	515
630	605	580
710	682	653
800	768	736
900	864	828
1000	960	920

For Order Codes for class F utilization, see "DURIGNIT IR 2000 insulation".

For all motors:
The motors are intended to withstand 1.5 times the rated current for up to 2 minutes at rated voltage and frequency (DIN EN 60 034).

Ambient temperature
All motors with the standard design can be used at ambient temperatures of -20 °C to +40 °C.

Exceptions with Order Code **C13**:

Motor type	Size	Ambient temperature °C
1LA7	56M – 160L	–30 to +55
1LA6	100L – 160L	–30 to +55
1LG4	180M – 225M	–30 to +55
	250M – 315L	–20 to +55
1LG6	180M – 225M	–30 to +55
	250M – 315L	–20 to +55

Use acc. to class F

- at 40 °C with service factor 1.1 or 1.15 for 1LG6/1LA9,
- above 40 °C in compliance with rated output.

When used acc. to class B with higher ambient temperatures/ greater site altitude, the power is reduced according to the table at the bottom of Page 2/13.

Motors which are supplied directly have the service factor marked on the rating plate.

Special design measures are necessary for other ambient temperatures.

Inquiry is necessary if brakes are needed for subzero temperatures.

Rating plate

Motor type	Size	Rating plate: international	de	en	de/en	fr/es	it	pt	ru	Double rating plate 50/60 Hz data for: 500 VY and 575 VY / 500 VΔ and 575 VΔ	400 V/690 V a. 460 V
1LA5	all	■		●						■	■
1LA7	all	■		●						■	■
1LA9	all	■		●						■	■
1LA6	all	■		●							■
1LA6	100 to 160	■		●						■	■
1LG4	all	■							▲		■
1LG6	all	■							▲		■
1LA8	all				■	●	●	●			
1MA7	all	■		●							
1MA6	180 to 200	■		●							
1MA6	from 225			●	■	●	●	●	▲		
1MJ6	71 to 200	■		●							
1MJ7	225 to 315				■	●	●	●	▲		
1MJ8	all		■			▲	▲	▲	▲		
1MJ1	all		■			▲	▲	▲	▲		

■ Standard design
● with no extra charge
▲ with extra charge

DIN EN 60034-1 lays down that the approximate total weight for all motors from frame size 90 (from approx. 30 kg) is indicated on the rating plate.

A second rating plate can be supplied loose for all motors, Order Code **K31**.

In addition, a supplementary plate with the order specifications is available, Order Code **Y82**.

Ex Also, for type 1MA motors:
With the exception of the 2-pole motors with frame size 225 M or larger, all motors are simultaneously suitable for T1/T2 and T3 (standard design). If the rated output for T1/T2 differs from that for T3, the data for both outputs is stated on separate rating plates.

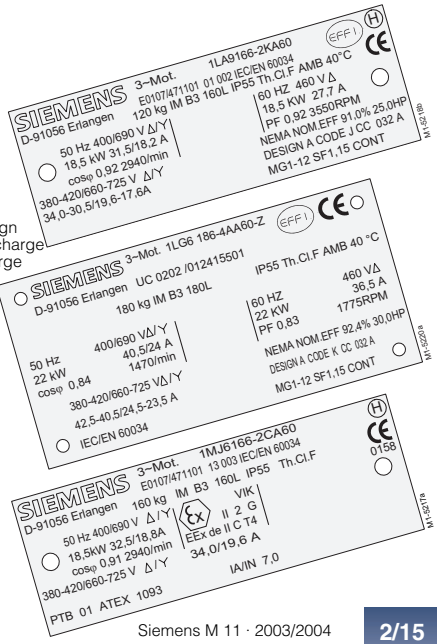

Examples of rating plates

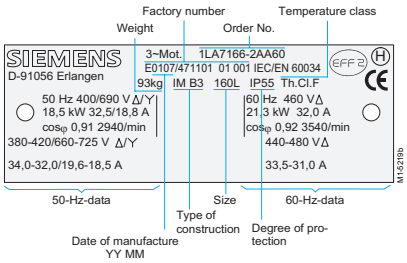

Electrical features

2

Efficiency, power factor, and rated torque

Efficiency and power factor

The efficiency η and power factor cos φ values for each rated output are listed in the selection tables in the individual sections of this catalogue.

For eff1 and eff2 motors, the $^3/_4$ load efficiency is also indicated.

The part-load values stated in the table opposite are averages; precise values can be provided on request.

Part-load efficiency % at				
1/4 of full load	1/2	3/4	**4/4**	5/4
93	96	97	**97**	96.5
92	95	96	**96**	95.5
90	93.5	95	**95**	94.5
89	92.5	94	**94**	93.5
88	91.5	93	**93**	92.5
87	91	92	**92**	91.5
86	90	91	**91**	90
85	89	90	**90**	89
84	88	89	**89**	88
80	87	88	**88**	87
79	86	87	**87**	86
78	85	86	**86**	85
76	84	85	**85**	83.5
74	83	84	**84**	82.5
72	82	83	**83**	81.5
70	81	82	**82**	80.5
68	80	81	**81**	79.5
66	79	80	**80**	78.5
64	77	79.5	**79**	77.5
62	75.5	78.5	**78**	76.5
60	74	77.5	**77**	75
58	73	76	**76**	74
56	72	75	**75**	73
55	71	74	**74**	72
54	70	73	**73**	71
53	68	72	**72**	70
52	67	71	**71**	69
51	66	70	**70**	68
50	65	69	**69**	67
49	64	67.5	**68**	66
48	62	66.5	**67**	65
47	61	65	**66**	64
46	60	64	**65**	63
45	59	63	**64**	62
44	57	62	**63**	61
43	56	60.5	**62**	60.5
42	55	59.5	**61**	59.5
41	54	58.5	**60**	58.5

Part-load power factor at				
1/4 of full load	1/2	3/4	**4/4**	5/4
0.70	0.86	0.90	**0.92**	0.92
0.65	0.85	0.89	**0.91**	0.91
0.63	0.83	0.88	**0.90**	0.90
0.61	0.80	0.86	**0.89**	0.89
0.57	0.78	0.85	**0.88**	0.88
0.53	0.76	0.84	**0.87**	0.87
0.51	0.75	0.83	**0.86**	0.86
0.49	0.73	0.81	**0.85**	0.86
0.47	0.71	0.80	**0.84**	0.85
0.45	0.69	0.79	**0.83**	0.84
0.43	0.67	0.77	**0.82**	0.83
0.41	0.66	0.76	**0.81**	0.82
0.40	0.65	0.75	**0.80**	0.81
0.38	0.63	0.74	**0.79**	0.80
0.36	0.61	0.72	**0.78**	0.80
0.34	0.59	0.71	**0.77**	0.79
0.32	0.58	0.70	**0.76**	0.78
0.30	0.56	0.69	**0.75**	0.78
0.29	0.55	0.68	**0.74**	0.77
0.28	0.54	0.67	**0.73**	0.77
0.27	0.52	0.63	**0.72**	0.76
0.26	0.50	0.62	**0.71**	0.76

Rated torque

The rated torque in Nm delivered at the motor shaft is

$$M = \frac{9.55 \cdot P \cdot 1000}{n}$$

P Rated output in kW
n Speed in rpm

■ If the voltage deviates from its nominal value within the allowed limits, the locked-rotor torque, the pull-up torque, and the breakdown torque vary with the approximate square of the value, while the locked-rotor current varies approximately linearly.

In the case of squirrel-cage motors, the locked-rotor torque and the breakdown torque are listed in the selection tables as multiples of the rated torque.

The normal practice is to start squirrel-cage motors directly on-line. The torque class indicates that with direct-on-line starting – even if there is –5% undervoltage – it is possible to start up the motor against a load torque of

up to
160% for CL 16
130% for CL 13
100% for CL 10
70% for CL 7
50% for CL 5
of the rated torque.

The individual torque characteristics are available in the SD configurator. In addition, it is possible to perform calculations with the supplied start-up program.

Ex For type 1MA motors
In the case of the standard design for T1/T2 and T3 and different rated outputs, the torque class specified for the higher output applies.

Insulation, winding, motor protection, and anti-condensation heating

DURIGNIT® Insulation IR 2000

- The DURIGNIT IR 2000 insulation system comprises high-grade enameled wires and insulating sheet materials combined with solvent-free impregnating resin.

The system ensures a high level of mechanical and electrical strength as well as good serviceability and a long motor life.

The insulation offers general protection for the windings against corrosive gases, vapors, dust, oil and increased humidity, and resists the normal stresses of vibration.

The insulation is suitable for an absolute humidity of up to 30 g water per m^3. The windings must not become moist. Higher values on request!

- The windings of the 1LA8 motors are impregnated using the UV or VPI techniques.

Please inquire about extreme applications.

All motors are designed for class F.
Utilization of motors for rated output and mains-fed operation for class B.

All 1LA and 1LG motors can be stamped with the ratings in accordance with the selection tables and rated voltage range as well as with a service factor (SF) of 1.1 (for 1LA9 and 1LG6 SF = 1.15) and 1.05 for frame sizes 400 and 450. Order Code **C11**.

The service factor is already stamped on the rating plate of standard ex-stock motors and 1LA8 motors.
If the motor is used for class F, the rated output specified in the selection and ordering data can be increased by 10% (by 15% for 1LA9 and 1LG6 and by 5% for frame sizes 400 and 450). Order Code **C12**.

If the catalogue ratings are used, it is permissible to increase the temperature of the coolant to 55 °C (or to 50 °C for frame sizes 400 and 450). Order Code **C13**.

The service factor (SF) is not stamped on the rating plate for Order Codes **C12** and **C13**.

Restarting against residual field and opposite phase

All motors can be reclosed against 100% residual field after a system voltage failure.

Motor protection with PTC thermistor

The motors are usually protected by delayed terminal overload protection devices (either circuit-breakers for motor protection or overload relays).

This type of protection is current-sensitive and is particularly effective under locked-rotor conditions.

The motors can also be protected by means of semiconductor temperature sensors (thermistors) embedded in the winding and operating in conjunction with a tripping unit (thermistor motor protection) (Order Code **A11** or **A12**).

This type of protection is temperature-sensitive and prevents the motor windings from overheating, e.g. due to sharply fluctuating loads or frequent switching.

- All 1LA8 motors with the standard design are fitted with 6 PTC thermistors for alarm and tripping.
- The response temperature of the PTC thermistors for the 1LA, 1MJ and 1LG motors corresponds to class F.

In order to achieve full thermal protection it is necessary to combine a thermally delayed overcurrent release and a PTC thermistor. Full motor protection implemented only with PTC thermistors on request.

Ex For type 1MJ motors:
Always use PTC thermistors if the duty is anything other than S1.

- PTC thermistors are absolutely necessary if these motors are used for converter-fed operation. In this case, an additional thermistor is fitted in the terminal box for 1MJ6. Order Code **A15** or **A16**.

No additional anti-condensation heater can be integrated in designs with temperature sensors and frame sizes up to 200 L.

Thermistor protection takes the form of three PTC thermistors connected in series and embedded in the stator winding of the motor. The **3RN1** tripping unit which completes the system must be ordered separately – it is PTB certified. Further details about its mode of operation, circuitry, and price can be found in Catalogue LV 10, Order No.: E86060-K1002-A101-A4-7600.

Pole-changing motors with two separate windings need twice the number of temperature sensors.

If an alarm signal is to be output prior to the motor being shut down, two groups of three temperature sensors will be needed. The alarm signal is usually output at 10 K below shutdown temperature.

Motor temperature detection with temperature sensor KTY84

See "Converter-fed operation" Page 2/44.

Anti-condensation heating

Supply voltage 230 V
Order Code **K45**
Supply voltage 115 V
Order Code **K46**
Anti-condensation heaters can be fitted to motors whose windings are exposed to a risk of condensation due to the ambient climate, e.g. stationary motors in a damp environment or motors subjected to considerable fluctuations in temperature.

An additional M16 x 1.5 or M20 x 1.5 cable entry fitting is provided in the terminal box for the power supply cable.

The anti-condensation heater must not be switched on while the motor is running.

An alternative to anti-condensation heaters (involving no extra cost) is to connect a voltage of around 4 to 10% of the motor rated voltage to stator terminals U1 and V1; 20 to 30% of the motor rated current provide an adequate heating effect (does not apply to 1MA6 motors, frame sizes 225 M to 315 L, 1LA8).

Ex For 1MJ6 motors:
No built-in anti-condensation heater is available for 1MJ6 motors up to frame size 160 L when equipped with PTC thermistors.

For 1MA. and 1LA. motors in Zone 21:
No built-in anti-condensation heater is available up to frame size 200L.
For 1LA. motors in Zones 2 and 22:
Built-in anti-condensation heating on request.

For motors	Size	Heat output (W) for Order Code **K45** (230 V)	**K46** (115 V)
1LA5, 1LA6, 1LA7, 1LA9	56 to 80	25	25
	90 to 112	50	50
	132 to 200	100	100
	225	78	78
1LG4, 1LG6 1MJ6, 1MJ7/1MA6	180 and 200	55	55
	225 and 250	92	92
	280 and 315	109/105	109/105
1LA8	all	200	183
1MJ8	315	100	100
	355	200	200
1MJ1	355	250	250
	400	250	250
	450	280	280
1LG4/1LG6 in (E)Ex nA	180 and 200	48	48
	225 and 250	92	92
	280 and 315	105	105

Electrical features

Connection, switching, and terminal boxes

The position of the terminal box always refers to as viewed from the drive end.

There are marked terminals for connecting the protective conductor.

On the outside of the motor housing is an earthing terminal (special design for 1LA5, 1LA6, and 1LA9 motors). Order Code **L13**).

The terminal boxes for motors with (E)Exn (Zone 2) type of protection and protection against dust explosions (Zone 21) deviate from the standard design.

Ex For type 1MJ motors:
The terminal box is in accordance with EEx e type of protection. The ends of the windings for motors up to frame size 160 are routed through a shared explosion-proof leadthrough into the terminal box; for frame size 180 and higher through single leadthroughs.

■ Motor connection

Mains conductors
The mains conductors must be dimensioned in accordance with DIN VDE 0298. The number of required – possibly parallel – feeders is determined by

- the maximum connectable conductor cross-section,
- the cable type,
- the laying arrangement
- the ambient temperature and
- the permissible current in accordance with DIN VDE 0298.

Parallel feeders
Some motors must be fitted with parallel feeders due to the maximum permissible current per terminal. These motors are marked in the selection tables. Two parallel feeders are used for motors with 1XB7 terminal boxes, with terminal box 1XB1 631 up to four feeders are possible.

Motors with a terminal box cover and auxiliary terminals (e.g. for Order Code **A11**) also have a cable entry M16 x 1.5 or M20 x 1.5 with plug.

For details please consult data sheet functions in SD configurator.

1LA7 and 1LA9, frame sizes 100 L to 160 L
The terminal box is integrated into the frame. On each side there are knock-out openings for boltings.

The bolting nuts for the boltings are included with the terminal box.

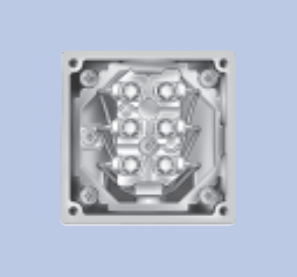
Type gk030

Type gk130, 230, 330

Type gk330 for 1LA5, 1LG4

Type gk 135, 235, 335

Type gk430, gt431

Type 1XB7 222

Type gt 520, 540, 620, 640

Type 1XB7 422, 522

Type 1XB7 622

Connection, switching, and terminal boxes (continued)

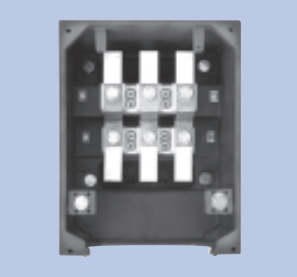

Type 1XB1 621

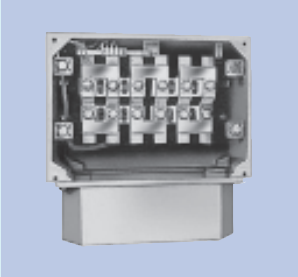

Type 1XB1 631

Type gk465

Type 1XC1 270, 380

Type 1XC1 480, 580

Type 1XB7 322

Terminal boxes for 1LA and 1LG motors

Motors	Size	Number of cable entries	Terminal box material	Feeder connection
1LA7, 1LA9	56 to 71	2 holes with plugs	Aluminum alloy	Without cable lug or with cable lug
	80 to 90			
	100 to 160	2 holes 180° apart, 4 knock-out openings in cast-iron skin, sealed (4 left, 2 right), Terminal box is moulded		
1LA5, 1LA9	180 to 225	2 holes with plugs		
1LA6	100 to 160		Cast iron	
1LG4, 1LG6	180 to 200		Aluminum alloy [3])	Without cable lug
	225			With cable lug
	250 to 315		Cast iron	
1LA8	315 and 355 [1])			
	400 and 450	4 holes, sealed		

Possible terminal box positions for 1LA and 1LG motors

Motors	Size	Terminal box position			Rotation of terminal box		
		Top	Right-hand side or left-hand side	Retrofitting possible	90° [2])	180° [2])	Retrofitting possible
1LA5, 1LA7, 1LA9	56 to 71	●	–	–	●	●	✔
	80 to 90	●	●	–	●	●	✔
	100 to 160	●	●	–	– [5])	●	✔
	180 to 225	●	●	–	●	●	✔
1LA6	100 to 160	●	●	–	●	●	✔
1LG4, 1LG6	180 to 315	●	●	– [4])	●	●	✔
1LA8	315	●	● [1])	–	●	●	–
	355	●	● [1])	–	●	●	–
	400 and 450	●	● [1])	–	●	●	–

● Available design

Further information under 1LA8 motors, see "Dimensions", "1LA8".

1) Rotated by 15°.

2) The position of the cable entry must be specified when ordering.

3) Terminal box in cast iron design with Order Code **K15**.

4) Retrofitable with screwed on feet (Order Codes **K09**, **K10** and **K11**).

5) Design for 1LA7 motors available on request.

Connection, switching, and terminal boxes (continued)

Terminal boxes for 1LA5, 1LA6, 1LA7, and 1LA9 motors								
Size	Type 1LA5 1LA7 1LA9	Type 1LA6	Number of terminals	Terminal screw thread	Max. conductor size mm^2	Sealing range in accordance with DIN 46319 mm	Cable entry [1][3] Size	Split plate [2] Max. outer cable diameter mm
56	gk 030		6	M4	2.5	9 – 17	M25 x 1.5	–
63						4.5 – 10	M16 x 1.5	
71								
80								
90								
100	gk 130	gk 135	6	M4	4	11 – 21	M32 x 1.5	–
112								
132	gk 230	gk 235	6	M4	6	11 – 21	M32 x 1.5	–
160	gk 330	gk 335	6	M5	16	19 – 28	M40 x 1.5	–
180								
200	gk 430		6	M6	25	27 – 35	M50 x 1.5	–
225	gk 431		6	M8	35	27 – 35	M50 x 1.5	–
Terminal boxes for 1LG4 and 1LG6 motors								
180	gk 330		6	M5	16	19 – 28	M40 x 1.5	–
200	gk 430		6	M6	25	27 – 35	M50 x 1.5	–
225	gt 431		6	M8	35	27 – 35	M50 x 1.5	–
250	gt 520		6	M10	120	32 – 42	M63 x 1.5	40 – 50
280								
315	gt 620		6	M12	240	40 – 48	M63 x 1.5	40 – 60
Terminal boxes for 1LA8 motors								
315	gt 640		6	M12	240	40 – 48	M63 x 1.5	40 – 60
355	1XB1 621		6	M16	400	41 – 56	2 x M72 x 2/ 2 x M25 x 1.5	40 – 70
400	1XB1 631		12	M16	400	–	4 x Ø80/ 2 x M25 x 1.5	40 – 75
450								

The terminal box list does not apply to pole-changing motors with three speeds.

Terminal boxes for Ex-motors 1MA6, 1MA7 and for motors 1LA6/7/8/9 and 1LG4/6 in (E)Ex n-design and in Zone 21				
Motors	Size	Number of cable entries	Terminal box material	Feeder connection
1MA7, 1LA7, 1LA9	63 to 90	2 holes incl. 1 certified bolting with sealing ring and 1 certified plug	Aluminum alloy	Without cable lug [4]) or with cable lug
	100 to 160	4 holes incl. 1 certified bolting with sealing ring and 3 certified plugs		
1MA6, 1LA6	100 to 160	2 holes incl. 1 certified bolting with sealing ring and 1 certified plug	Cast iron	
1MA6, 1LA9, 1LG4, 1LG6	180 to 225	2 holes incl. 2 certified boltings with sealing rings	Aluminum alloy	
	250 to 315		Cast iron	
1LA8	315 and 355			
	400 and 450	4 holes, sealed		

1) Designed for cable glands with O-ring.

2) Split plate available at extra charge.
Order Code **K06**.
For standard design of terminal box 1XB1 631.
With strain relief for frame size 250 M or larger.

3) Contains speed nuts for the cable glands for 1LA7 motors with frame sizes 100 to 160.

4) The parts required for the connection without cable lugs are supplied in an accessories pack with the terminal box for all motors with frame size 225 or larger.

Connection, switching, and terminal boxes (continued)

Possible terminal box positions for 1LA6/7- (in (E)Ex n-design), 1MA and 1MJ motors

Motors	Size	Terminal box position			Rotation of terminal box		
		Top	Right-hand side or left-hand side	Retrofitting possible	90° [1])	180° [1])	Retrofitting possible
1MA7 and 1LA7 in (E)Ex n	63 to 71	●	–	–	●	●	✔
	80 to 90	●	●	–	●	●	✔
	100 to 160	●	●	●	–	● [2])	✔
1MA6 and 1LA6 in (E)Ex n	100 to 160	●	●	●	●	●	✔
	180 to 225	●	●	–	●	●	✔
	250 to 315	●	●	–	●	●	–
1MJ6	71 to 200	●	●	–	●	●	✔
1MJ7	225 to 315	●	●	–	●	●	✔
1MJ8	315 to 355	●	●	–	●	●	✔
1MJ1	355 to 450	●	●	–	●	●	✔

● Available design

Terminal boxes for 1MA6, 1MA7 motors and 1LA6/7/9 motors in (E)Ex n-design and Zone 21

Size	Type 1MA7 1LA7 1LA9	Type 1LA6 1MA6	Number of terminals	Terminal screw thread	Max. conductor size mm²	Sealing range mm	Cable entry [3]) Size	Split plate Maximum outside cable diameter mm
63	gk 130		6	M4	4	11 – 16	M25 x 1.5	–
71						5 – 9	M16 x 1.5	
80								
90								
100		gk 135				14 – 21	M32 x 1.5	–
112								
132	gk 230	gk 235	6	M4	6			
160	gk 330	gk 335	6	M5	16	19 – 27	M40 x 1.5	–
180	1XB7 222	1XB7 222	6	M6	10	19 – 27	M40 x 1.5	–
200	1XB7 322	1XB7 322	6	M8	50	24 – 35	M50 x 1.5	–
225	–							
250	–	1XB7 422	6	M10	120	32 – 42	M63 x 1.5	–
280	–							
315	–	1XB7 522	6	M12	240	40 – 48	M63 x 1.5	–
Terminal boxes for 1LG4/6 motors in (E)Ex n-design and Zone 21								
180	gt 351		6	M6	10	19 – 27	M40 x 1.5	–
200	gt 451		6	M8	50	24 – 35	M50 x 1.5	–
225								
250	gt 540		6	M10	120	32 – 42	M63 x 1.5	–
280								
315	gt 640		6	M12	240	40 – 48	M63 x 1.5	–
Terminal boxes for 1LA8 motors in (E)Ex nA								
315	gt 640		6	M12	240	40 – 48	M63 x 1.5	40 – 60
355	1XB1 621		6	M16	240	41 – 56	2 x M72 x 2/ 2 x M25 x 1.5	40 – 70
400	1XB1 631		12	M16	240	–	4 x Ø80/ 2 x M25 x 1.5	40 – 75
450								

Unused holes for 1MA motors must be sealed in accordance with EN 50 014.

1) The position of the cable entry must be specified when ordering.

2) For frame size 100 or larger.

3) Designed for cable glands with O-ring.

Connection, switching, and terminal boxes (continued)

Terminal boxes (EEx e) for 1MJ6, 1MJ7, 1MJ8, and 1MJ1 motors

Motors	Size	Number of cable entries	Terminal box material	Feeder connection
1MJ6	71 and 80 90 to 160	2 holes incl. 1 certified bolting with sealing ring, 1 certified plug	Aluminum alloy size 160 L cast iron	Without cable lug or with cable lug [1])
	180 to 200	2 holes incl. 2 certified boltings with sealing rings	Aluminum alloy	
1MJ7	225 250 to 315		Cast iron	
1MJ8	315 to 355	2 threaded holes without boltings		
1MJ1	355 to 450		Welded steel	

Terminal boxes (EEx e) for 1MJ6, 1MJ7 motors

Size	Type	Number of terminals	Terminal screw thread	Max. conductor size	Sealing range	Cable entry [3])
				mm^2	mm	Size
71 **80**	gk 330	6	M4	4	11 – 16	M25 x 1.5
90	gk 420	6	M4	6	11 – 16	M25 x 1.5
100					14 – 21	M32 x 1.5
112 **132**	gk 420	6	M4	6	14 – 21	M32 x 1.5
160	gk 465 •		M5 •	16 •	19 – 27	M40 x 1.5
180	1XC1 270	6	M6	25	19 – 27	M40 x 1.5
200 **225**	1XC1 380	6	M8	50	24 – 35	M50 x 1.5
250 **280**	1XC1 480	6	M10	120	32 – 42	M63 x 1.5
315	1XC1 580	6	M12	240	40 – 48	M63 x 1.5
Terminal box (EEx e) for 1MJ8 motors						
315	without designation	6	M12	120 to 300	37 – 44 [2])	M63 x 1.5 [2])
355		6	M16		35 – 75 [2])	
Terminal box (EEx e) for 1MJ1 motors						
355 **400** **450**	Available soon					

• For frame size 160L

■ Explosion-proof terminal boxes can be fitted (to order), except for frame sizes 180 and 200.

■ Unused holes for 1MJ motors must be sealed in accordance with EN 50 014.

1) The parts for the connection without cable lugs are supplied in an accessories pack with the terminal box for all 1MJ7 motors with frame size 225 M or larger.

2) Standard design from size 315 L with cable entry gland split lengthwise for 35 - 75 mm and strain relief.

3) Designed for cable glands with O-ring.

Frame design

Some foot-mounting motors have two fixing holes at the non-drive end (see dimensions table).

There is a cast inscription near these fixing holes to differentiate between frame sizes.

Degrees of protection

All motors are designed for IP55.

They are suitable for use in dusty or damp surroundings. The motors can be used in the tropics. Approx. value 60% relative humidity at CT 40 °C. Other requirements on request.

- All motors which have a shaft extension pointing upwards must have a means (provided by the user) of preventing the ingress of liquids along the shaft.

In the case of flange-mounting motors with IM V 3 type of construction, the liquid level in the flange recess can be prevented from rising by means of drain holes (on request).

These are standard for 1MA6 and 1MJ7 motors with frame size 225 or larger and for all 1LG4 and 1LG6 motors.

For all motors with the shaft end pointing downwards, the version "with canopy" is recommended; see Section "Technical Information", "Types of Construction".

1LG4, 1LG6, 1LA8 or 1MA6 with frame size 225 or larger come with condensation water holes sealed with plugs.

If the motors are operated or stored outdoors, a shielding or an additional cover is recommended, so as to avoid long-term effects when exposed to direct, intensive sunlight, rain, snow, ice or dust. If necessary, consult with Siemens about technical adjustments.

Cooling and ventilation

Standard motors with frame sizes 63 to 450 are fitted with a radial-flow fan which functions independently of the direction of rotation (cooling method IC 411 to DIN EN 60 034-6). The air is blown from the non-drive end to the drive end.

Motors with frame size 56 have no fan (IC 410).

- Standard two-pole 1LA8 motors (with frame size 355 or larger) come with an axial-flow fan with clockwise rotation. The fan can be retrofitted for anti-clockwise rotation.

If the motor is installed in an area with a limited air supply, it is essential to ensure a minimum clearance between the fan cowl and the wall which is calculated by subtracting the length of the canopy from the length of the cowl (dimension LM – L).

Materials

Type series	Size	Fan material [1])	Fan cowl material [1])
1LA5, 1LA7	63 to 225	Plastic	Corrosion-protected steel plate
1LA9	63 to 200		
1LA6	100 to 160		
1MA7	63 to 160		
1MA6	100 to 315		
1MJ6	71 to 200		
1MJ7	255 to 315		
1LA8	315 to 450		
1LG4, 1LG6 [2])	180 to 315	Plastic	Glass-reinforced plastic
1MJ8	315 to 355	Welded steel plate	Corrosion-protected steel plate
1MJ1	355 to 450		

Coupling to gearboxes

The flange-mounting motors can be fitted with a radial seal for coupling to gearboxes.

Order Code **K17**.

There must be adequate lubrication with grease, oil spray or oil mist (pressure oil is not allowed).

It is advisable to check the permitted bearing loads.

Please enquire about 1LA8 motors.

1) Designs for Zones 2, 21, and 22 and VIK design sometimes make use of other materials.

2) Designs for Zones 2, 21, 22, VIK (Order Code **K30**), CSA (Order Code **D40**) and UL (Order Code **D31**) make use of a fan shroud made of corrosion resistant sheet-steel.

Mechanical design

Eyebolts

The 1LA7, 1MA7 and 1LA5 horizontally mounted motors from frame size 100 L or larger have two cast eyebolts. Vertically mounted motors are additionally supplied with two repositionable eyebolts.

The 1LA6, 1MA6 horizontal foot-mounting motors are supplied with one eyebolt.

Frame sizes 100 to 160 are supplied with horizontal flange-mounting types with one eyebolt. One repositionable eyebolt is additionally supplied for vertically mounted motors. For frame sizes 180 M to 315 L, all flange-mounting types are supplied with two diagonal eyebolts. They can also be used for vertically mounted motors.

The horizontally mounted 1LG4 and 1LG6 motors are supplied with two diagonal eyebolts. The eyebolts of vertically mounted motors are repositionable.

All available type-specific eyebolts must be used for transport.

■ The 1MA6 and 1MJ6 motors with frame size 180 M or larger have one eyebolt with the standard IM B 3 type of construction, the IM B 5 type of construction has two eyebolts. If the motors are used with the IM V 1 type of construction, one of the eyebolts must be repositioned, whereby care must be taken to avoid stress perpendicular to the eyebolt.

1LA8 motors have two diagonally arranged eyebolts.

1MJ6 motors, frame size 100 L to 132 M have two eyebolts, frame sizes 160 M and 160 L one eyebolt.

Type series	Size	Frame material	Frame feet
1LA5, 1LA7, 1LA9	56 to 100 [2] 112 to 225	Aluminum alloy Aluminum alloy	cast bolted
1MA7	63 to 100 [2] 112 to 160	Aluminum alloy Aluminum alloy	cast bolted
1LG4, 1LG6	180 M to 315 L	Cast iron	cast [3]
1LA6, 1MA6	100 to 200 225 to 315 M 315 L	Cast iron Cast iron Cast iron	bolted cast bolted
1MJ6	71 and 80 90 to 160 180 to 315	Cast iron Cast iron Cast iron	cast bolted bolted
1LA8	315 to 450	Cast iron	cast
1MJ8	315 to 355	Welded steel	welded
1MJ1	355 to 450		

Speed and direction of rotation

The rated speed values apply to operation under rated conditions. The synchronous speed varies in direct proportion to the frequency of the power supply system.

The motors are suitable for operation in either direction of rotation.

Exceptions are the following 2-pole motors:

- 1LA8 from size 355
- 1LA8, 1MJ8, 1MJ6, 1MJ1, 1MA6, and 1LG4 in VIK design from size 315.

Connecting terminals U1, V1, W1 to phases L1, L2, L3 will result in clockwise rotation looking towards the drive end of the shaft. Anticlockwise rotation can be achieved by interchanging two of the phases (see also "Cooling and ventilation").

1) The plastic fan can be used for ambient temperatures up to 70 °C.

2) Frame sizes 80, 90 and 100 with "side-mounted terminal box" has bolted feet.

3) Standard version with cast-on feet; Special design "srewed-on feet" for Order Codes K09, K10, K11 and for foot dimensions BB = 666 mm (see Section "Dimensions", "1LG4" and "1LG6").

Type of construction to EN 60 034-7		Size	Code 12th position	Order Code
IM B3		56 M to 450	**0** [4]	–
IM B 6/IM 1051, IM B 7/IM1061, IM B 8/IM1071	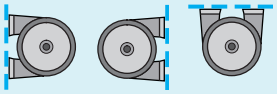	56 M to 315 L	**0**	–
IM V 5/IM1011 without canopy		56 M to 315 M 315 L	**0** **9** [1]	– **M1D**
IM V 6/IM 1031		56 M to 315 M 315 L	**0** **9** [1]	– **M1E**
IM V 5/IM 1011 with canopy		63 M to 315 L	**9** [1][7]	**M1F**
Flange				
IM B 5/IM 3001		56 M to 315 M	**1** [2]	–
IM V 1/IM 3011 without canopy		56 M to 315 M 315 L to 450	**1** [2][3] **8** [4][5][1]	– –
IM V 1/IM 3011 with canopy		63 M to 450	**4** [1][2][3][5][7]	–
IM V 3/IM 3031		56 M to 160 L 180 M to 315 M	**1** **9** [2][3]	– **M1G**
IM B 35/IM 2001 [6]		56 M to 450	**6** [4]	–

The flanges are assigned to the frame sizes as FF with through-holes in DIN EN 50 347.
A-flanges acc. to DIN 42 948 are still valid.

1) 60 Hz is available for 2-pole 1LG4 and 1LG6 motors with frame size 315 L on request.

2) The 1LG4/1LG6, 1MA6, and 1MJ7 motors with frame sizes between 225 S and 315 L are delivered with two bolted eyebolts (four eyebolts for 1LG6 318) according to IM B 5, one of which may be repositioned acc. to IM V 1 or IM V 3. Care must be taken to avoid stress perpendicular to the eyebolt.

3) With frame sizes between 180 M and 225 M, the 1LA5 motors are available with two additional eyebolts; please state order suffix "Z" and Order Code **K32**.

4) Frame size 450, 2-pole, 60 Hz not available.

5) 60 Hz design is not available for 2-pole 1LA8 motors with frame size 355 or larger.

6) With 1LA8, the related flange diameter is greater than double the shaft height.

7) Second **K16** shaft extension not available.

Mechanical design

2

Type of construction to DIN EN 60 034-7		Size	Code 12th position	Order Code
Standard flange				
IM B 14/IM 3601, IM V 19/IM 3631, IM V 18/IM 3611 without canopy	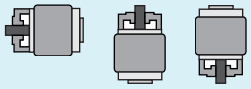	56 M to 160 L	**2** [2])	–
IM V 18/IM 3611 with canopy		63 M to 160 L	**9** [1])[2])	**M2A**
IM B 34/IM 2101		56 M to 160 L	**7** [2])	–
Custom flange				
IM B 14/IM 3601, IM V 19/IM 3631, IM V 18/IM 3611 without canopy	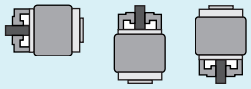	56 M to 160 L	**3** [3])	–
IM V 18/IM 3611 with canopy		63 M to 160 L	**9** [1])[3])	**M2B**
IM B 34/IM 2101		56 M to 160 L	**9** [3])	**M2C**

The standard flanges are assigned to the frame sizes as FT with threaded holes in DIN EN 50 347.
C-flanges acc. to DIN 42 948 are still valid.
The custom flange was assigned as large flange in the previous DIN 42 677.

All types of construction within the following series have equal dimensions:
IM B3, IM B6, IM B7, IM B8, IM V5, and IM V6
IM B5, IM V1, and IM V3
IM B14, IM V18, and IM V19

The motors in the standard power range are available in the standard types of construction IM B3, IM B5 or IM B14, and can be operated in mounting positions IM B6, IM B7, IM B8, IM V5, IM V6, IM V1, IM V3 (up to frame size 160 L) or IM V18 and IM V19. Eyebolts are available for transport and installation in a horizontal position. In conjunction with the eyebolts, for the purpose of stabilizing the position when the motor is arranged vertically, additional lifting straps (DIN EN 1492-1) and/or clamping bands (DIN EN 12195-2) must be used. If mounting position IM V1 is ordered, eyebolts are supplied for vertical mounting.

- On the normal rating plate, therefore, they are marked with only the basic type of construction.
- If foot-type motors larger than frame size 180 M are mounted to the wall, it is recommended that especially the motor feet are supported.

For all motors with the shaft end pointing downwards,
the version "with canopy" is recommended;
see Section "Technical Information", "Degrees of protection".

Ex For explosion-proof motors:
For types of construction with shaft end pointing downwards,
the version "with canopy" is mandatory.
Types of construction with shaft end pointing upwards must be
suitably covered in order to avoid that small parts
fall into the fan cowl.
(See also Section 17 DIN EN 50 014).
The cooling may not be impaired by the cover.

1) Second **K16** shaft extension not available.
2) For 1MJ6 motors only possible for frame size 90.
3) For 1MJ6 motors only possible for frame size 80.

Shaft extensions

60° centre hole to DIN 332, Part 2.

Drive-end shaft extension diameter mm	Thread mm
7 to 10	DR M3
Over 10 to 13	DR M4
Over 13 to 16	DR M5
Over 16 to 21	DR M6
Over 21 to 24	DR M8
Over 24 to 30	DR M10
Over 30 to 38	DR M12
Over 38 to 50	DS M16
Over 50 to 85	DS M20
Over 85 to 130	DS M24

The shaft extension at the non-drive end of frame sizes 100 L to 225 M has a M8 centre hole, DR form, for mounting of the rotary pulse encoder 1XP8 001 or for fitting and extraction tools. The non-drive end of the 1LG4 and 1LG6 motors with the frame sizes 180 M to 315 L has a M16 centre hole, DR form.

Second standard shaft extension.
Order Code **K16** (extra charge).

The second shaft extension can transmit the full rated output via a coupling drive output up to frame size 315 M (please enquire about reduced transmitted power for frame sizes larger than 315 L). The full rated output does not apply to 1LA motors, frame sizes 90 S to 112 M. These motors can only transmit the rated output of the next lower size.

Please also enquire about the transmitted power and maximum cantilever force if belt pulleys, chains or gear pinions are used on the second shaft extension.

A second shaft extension is not available if a rotary pulse encoder and/or separately driven fan is mounted. Please enquire if a brake is mounted.

■ Dimensions and tolerances for key ways and keys designed to DIN EN 50347. The motors are always delivered with inserted key.

Balance and vibration severity

All the rotors are dynamically balanced with half keys to vibration severity grade N (standard). DIN EN 60 034-14 controls the vibration behavior of machines. This standard stipulates the "half key" type of balancing in line with DIN ISO 8821.

Limits of vibration severity in mm/s Effective frame size *H* in mm

		Free suspension				Rigid installation
Vibration severity grade	Rated speed range rpm	56 < *H* ≤ 132	132 < *H* ≤ 225	225 < *H* ≤ 400	H > 400	H > 400
N	600 to 3600	1.8	2.8	3.5	3.5	2.8
R	600 to 1800	0.71	1.12	1.8	2.8	1.8
	>1800 to 3600	1.12	1.8	2.8	2.8	1.8
S	600 to 1800	0.45	0.71	1.12	–	–
	>1800 to 3600	0.71	1.12	1.8	–	–

Remember that the measured values may deviate from the actual values by ±10%.

The type of balancing is marked on the drive-end shaft extension of the motor as follows:
F = Balancing with full key
H = Balancing with half key
N = Balancing without key

Motors up to frame size 80 have the type of balancing marked on the rating plate.
Full key balancing can be supplied if Order Code **L68** is specified (extra charge).
Precision-balanced motors can be supplied for meeting stricter specifications regarding the mechanical balance quality (extra charge).

Vibration severity grade R (reduced).
Order Code **K01**.

Vibration severity grade S (special) on request. (Not available with parallel roller bearing)

The limit values quoted here are applicable to freely suspended motors running uncoupled and at no load, as well as to rigidly installed 1LA8 motors, frame size 450.

For converter operation with frequencies larger than 60 Hz, special balancing is required for compliance with the specified limit values (plain text: max. speed).

For more details, see online help in SD configurator.

■ Precision-balanced designs of pole-changing motors are available in accordance with DIN EN 60 034-14.

Mechanical design

2

Noise (mains-fed operation)

The noise levels are measured in accordance with DIN EN 21 680-1 in a dead room with rated power. L_{pfA} is specified in dB (A) as the A-weighted measuring-surface sound pressure level.

This value is the spatial mean value of the sound pressure levels measured on the test hemisphere. This test hemisphere is a cuboid at a distance of 1 m from the machine surface. In addition, the sound power level L_{WA} is specified in dB (A).
The values are applicable at 50 Hz with a tolerance of +3 dB. They are approximately 4 dB (A) higher at 60 Hz.
Please enquire about the noise levels for pole-changing motors, motors with an increased power output or motors for converter-fed operation.

A-weighted measuring-surface sound pressure level and sound power level at rated power
Standard design

Type series	Size	Measuring-surface sound pressure level (L_{pfA}) Sound power level (L_{WA}) 2-pole L_{pfA} dB(A)	2-pole L_{WA} dB(A)	4-pole L_{pfA} dB(A)	4-pole L_{WA} dB(A)	6-pole L_{pfA} dB(A)	6-pole L_{WA} dB(A)	8-pole L_{pfA} dB(A)	8-pole L_{WA} dB(A)
1LA5, 1LA6, 1LA7, 1LA9, 1MA7, 1MA6, 1MJ6, 1MJ7	56	41	52	42	53	38	49	–	–
	63	49	60	42	53	39	50	–	–
	71	52	63	44	55	39	50	36	47
	80	56	67	47	58	40	51	41	52
	90	60	72	48	60	43	55	41	53
	100	62	74	53	65	47	59	45	57
	112	63	75	53	65	52	64	49	61
	132	68	80	62	74	63	75	53	65
	160	70	82	66	78	66	78	63	75
	180	70	83	63	76	66	78	60	73
	200	71	84	65	78	66	78	58	71
	225	71	84	65	78	59	72	58	71
	250	75	89	65	79	60	74	57	71
	280	77	91	67	81	60	74	58	72
	315	79	93	69	83	63	77	62	76
1LG4	180	69	82	65	78	59	72	67	80
	200	73	86	66	79	59	72	57	70
	225	73	86	66	79	60	73	61	74
	250	75	88	67	80	61	74	55	68
	280	74	87	70	83	61	74	58	71
	315	79	92	70	83	65	78	64	77
1LG6	180	67	80	60	73	56	69	66	79
	200	71	84	62	75	59	72	66	79
	225	71	84	60	73	59	72	58	71
	250	71	84	65	78	60	73	57	70
	280	73	86	67	80	58	71	58	71
	315	76	89	68	81	61	74	64	77
1LG4 increased power	180	71	84	65	78	59	72	67	80
	200	73	86	66	79	61	74	57	70
	225	73	86	66	79	60	73	61	74
	250	75	88	67	80	61	74	55	68
	280	74	87	70	83	61	74	58	71
	315	–	–	–	–	65	78	64	77
1LA8	315	82	97	73	87	68	82	65	79
	355	77 [1])	92 [1])	75	90	71	86	67	82
	400	79 [1])	94 [1])	78	93	73	88	69	84
	450	81 [1])	96 [1])	81	96	75	90	71	86
1MJ8	315	80	94	70	84	70	84	69	83
	355	82	97	73	88	75	90	73	88
1MJ1	355	78	94	76	92	74	90	75	91
	400	80	96	78	94	75	91	77	93
	450	82	99	80	97	77	94	79	96

In order to reduce noise levels, 2-pole motors with frame size 132 S or larger can be fitted with an axial-flow fan that is suitable for one direction of rotation only.

Clockwise rotation
Order Code **K37**

Anticlockwise rotation
Order Code **K38**

Low-noise design

Type series	Size	2-pole motors L_{pfA} dB(A)	L_{WA} dB(A)
1LA5, 1LA6, 1LA7,1MA7, 1MA6, 1MJ6, 1MJ7	132	64	76
	160	64	76
	180	63	76
	200	63	76
	225	68	80
	250	70	82
	280	72	84
	315	74	86
1LG4, 1LG6 [2])	180	65	78
	200	70	83
	225	68	81
	250	70	83
	280	72	85
	315	74	87
1LA8	315	75	90
1MJ8	315	68	82
	355	69	84
1MJ1	355	Available soon	
	400		
	450		

The motors up to frame size 315 L are up to 80 mm longer than normal.
A second shaft extension and/or rotary pulse encoder mounting is not possible.

1) The standard motors have an axial-flow fan for clockwise rotation. Order Code **K37** is not needed. For anticlockwise rotation please state Order Code **K38**.

2) Not required for 1LG6 motors because these motors are already noise optimized.

Bearings

Bearing life (nominal rated life)

The nominal bearing life is specified by standard calculation methods (DIN ISO 281) and is achieved or exceeded by 90 % of bearings when operated in accordance with catalog specifications.

If the operating conditions are below average, a bearing life of 100,000 (L_{h10}) hours can be achieved.

The bearing life essentially depends on the size of the bearing, the load, the operating conditions, the speed, and the relubrication interval.

Bearing system

The nominal bearing life of motors with horizontal type of construction is at least 40,000 hours if there is no additional axial loading at the output coupling; with the maximum permitted loads it is at least 20,000 hours.

This is provided that the motor is operated at 50 Hz. The nominal bearing life is reduced for converter-fed operation with higher frequencies.

In the basic design of the bearings system, the floating bearing is at the drive end (DE) and the located bearing (axially fixed from frame size 160) at the non-drive end (NDE). The located bearings can also be fitted to the drive end (DE) on request, (Fig. 3 Page 2/34).
Order Code **K94**

The bearings system is axially pre-loaded with a spring which ensures that the motor runs smoothly and free of clearance.

This does not apply to designs with parallel roller bearings. The bearings of these motors must always be operated with sufficient radial force (do not operate motor in test bay without additional axial loading).

The motors of the 1LA6, 1LA7, 1LA9, and 1MA7 series up to and including frame size 132 are fitted with a floating bearings system (Fig. 1 Page 2/34).

An additional axially secured bearing at the non-drive end (NDE) with a retaining ring can be delivered up to frame size 132 on request (Fig. 2 Page 2/34).
Order Code **L04**

From frame size 160, all bearings are axially fixed (Fig. 2, 4, and 5, Page 2/34).

If high cantilever forces are exerted at the drive end, e.g. owing to a belt transmission, the motors can be fitted with strengthened bearings on request.
Order Code **K20**

The 1LG4/6 motors with frame sizes 180 to 250 and with frame size 315, 2-pole, are available with strengthened deep groove ball bearings on both sides (dimension series 03).
Order Code **K36**

See pages 2/32 and 2/33 for a selection of bearings for high cantilever forces; maximum loadings on Page 2/37.

Prelubricated

For prelubricated bearings, the grease life is tailored to the bearing life. However, the motor must be operated according to catalogue specifications.

Standard motors with a frame size of up to and including 250 are prelubricated.

Regreasable

The bearing life of regreasable motors can be increased by observing specified relubrication intervals; this can also compensate for other factors such as temperatures, ingress of liquids, speed, bearing size, and mechanical load.

From frame size 280, the bearings can be regreased with a flat-type grease nipple M10 x 1 in accordance with DIN 3404.

Regreasable bearings can be fitted in motors with frame sizes 100 to 250.
Order Code **K40**

Grease life and regreasing intervals

Life lubrication[1])			
Type series	Size	Number of poles	Grease life up to CT 40 °C [2])
all	56 to 250	2 to 8	20,000 h or 40,000 h [3])
Regreasing[2])			
Type series	Size	Number of poles	Regreasing interval up to CT 40 °C [2])
1LA6	100 to 160	2 to 8	8000 h
1LA5 1LA7 1LA9	100 to 225	2 to 8	8000 h
1LA8	315 to 400	2	4000 h
		4 to 8	6000 h
	450	2	3000 h
		4 to 8	6000 h
1MA6	100 to 200	2 to 8	8000 h
	225 to 280	2	4000 h
		4 to 8	8000 h
	315	2	3000 h
		4 to 8	6000 h
1MA7	100 to 160	2 to 8	8000 h
1MJ6 1MJ7 1MJ8 1MJ1	180 to 200	2 to 8	8000 h
	225 to 280	2	4000 h
		4 to 8	8000 h
	315	2	3000 h
		4 to 8	6000 h
	355 to 450	2 and 4	2000 h
		6 and 8	4000 h
1LG4 1LG6	180 to 280	2	4000 h
		4 to 8	8000 h
	315	2	3000 h
		4 to 8	6000 h

1) For special uses and special greases, please ask about grease life and regreasing interval.

2) If the coolant temperature is increased by 10 K, the greasing life and regreasing interval is halved.

3) 40,000 h applies to clutch abrasion for horizontally installed motors without additional axial loads.

Bearings (continued)

Selection of bearings for 1LA, 1LG, and 1MA motors, basic design

For motors Frame size	Type 1LA5 . . . 1LA6 . . . 1LA7 . . . 1LA9 . . . 1MA6 . . . 1MA7 . . .	Number of poles	**Drive-end bearing**		**Non-drive end bearing**		Fig. No. on pages 2/34 and 2/35
			Horizontal motors	Vertical motors	Horizontal motors	Vertical motors	
56 M	. . . . 05 .	all	6201 2ZC3		6201 2ZC3		**Fig.1**
63 M	. . . . 06 .	all	6201 2ZC3		6201 2ZC3		
71 M	. . . . 07 .	all	6202 2ZC3		6202 2ZC3		
80 M	. . . . 08 .	all	6004 2ZC3		6004 2ZC3		
90 S/L	. . . . 09 .	all	6205 2ZC3		6004 2ZC3		
100 L	. . . . 10 .	all	6206 2ZC3 [1])		6205 2ZC3 [1])		
112 M	 113	all	6206 2ZC3 [1])		6205 2ZC3 [1])		
132 S/M	. . . . 13 .	all	6208 2ZC3 [1])		6208 2ZC3 [1])		
160 M/L	. . . . 16 .	all	6209 2ZC3 [1])		6209 2ZC3 [1])		**Fig. 2**
180 M/L	. . . . 18 .	all	6210 ZC3 [1])		6210 ZC3 [1])		**Fig. 4**
200 L	. . . . 20 .	all	6212 ZC3 [1])		6212 ZC3 [1])		
225 S/M	. . . . 22 .	all	6213 ZC3 [1])		6212 ZC3 [1])		
250 M	 253	all	6215 ZC3 [1])		6215 ZC3 [1])		
280 S 280 M	. . . . 28 .	2 4 to 8	6216 C3 6317 C3		6216 C3 6317 C3		**Fig. 5**
315 S 315 M	. . . . 310 313	2 4 to 8	6217 C3 6319 C3		6217 C3 6319 C3		
315 L	. . . . 316 . . . . 317 318	2 4 to 8	6217 C3 6319 C3	6217 C3 [3]) 6319 C3	6217 C3 6319 C3	7217 B [3]) 6319 C3	
	1LG4 . . . 1LG6 . . .						
180 M/L	. . . . 18 .	all	6210ZC3 [2])		6210ZC3 [2])		**Fig. 4**
200 L	. . . . 20 .	all	6212ZC3 [2])		6212ZC3 [2])		
225 S 225 M	. . . . 22 .	all	6213ZC3 [2])		6213ZC3 [2])		
250 M	. . . . 25 .	all	6215ZC3 [2])		6215ZC3 [2])		
280 S 280 M	. . . . 28 .	2 4 to 8	6217 C3 6317 C3		6217 C3 6317 C3		
315 S 315 M	. . . . 310 313	2 4 to 8	6219 C3 6319 C3		6219 C3 6319 C3		**Fig. 5**
315 L	. . . . 316 . . . . 317 318	2 4 to 8	6219 C3 6319 C3		6219 C3 6319 C3	7219 BEP	**Fig. 5**
	1LA8 . . .						
315	. . . . 31 .	2 to 8	6218 C3		6218 C3		**Fig. 6 and Fig. 7**
355	. . . . 35 . . . . . 35 .	2 4 to 8	6218 C3 6220 C3	7218 B + 6218 C3 7220 B + 6220 C3	6218 C3 6220 C3		
400	. . . . 40 . . . . . 40 .	2 4 to 8	6218 C3 6224 C3	7218 B + 6218 C3 7224 B + 6224 C3	6218 C3 6224 C3		
450	. . . . 45 . . . . . 45 .	2 4 to 8	6220 C3 6226 C3	7220 B + 6220 C3 7226 B + 6226 C3	6220 C3 6226 C3		

The bearing selection tables are only intended for planning purposes. Authoritative information on the actual type of bearings fitted in motors already supplied can be obtained from the factory by quoting the serial number or read off on the lubrication instruction plate of 1LA8 motors.

When deep-groove ball bearings with sideplates are used, the sideplate is on the inside. Fig. 3 (page 2/34) shows the non-standard design with a located bearing at the drive end for 1LA5, 1LA7, 1LA9, 1MA6, and 1MA7 motors.

1) Deep-groove bearings are used for regreasable designs (K40) (does not apply to 1LA6 up to size 160).

2) No deep-grove bearings are used for regreasable designs (K40).

3) Only at 50 Hz.

Bearings (continued)

Selection of bearings for 1MJ motors – basic design

For motors Frame size	Type	Number of poles	**Drive-end bearing** Horizontal and vertical motors	**Non-drive end bearing** Horizontal motors	Vertical motors	Fig. No. on page 2/35
71 M	1MJ6 07 .	all	6202 ZC3	6202 ZC3		**Fig. 8**
80 M	1MJ6 08 .	all	6004 ZC3	6004 ZC3		
90 L	1MJ6 09 .	all	6205 C3	6205 C3		**Fig. 9**
100 L	1MJ6 10 .	all	6206 C3	6206 C3		
112 M	1MJ6 11 .	all	6306 C3	6306 C3		
132 S 132 M	1MJ6 13 .	all	6308 C3	6308 C3		**Fig. 10**
160 M 160 L	1MJ6 16 .	all	6309 C3	6309 C3		
180 M 180 L	1MJ6 18 .	all	6210 C3	6210 C3		**Fig. 11**
200 L	1MJ6 20 .	all	6212 C3	6212 C3		
225 S 225 M	1MJ7 22 .	all	6213 C3	6213 C3		
250 M	1MJ7 253	all	6215 C3	6215 C3		
280 S 280 M	1MJ7 28 .	all	NU 216	6216 C3		**Fig. 12**
315 S 315 M	1MJ7 31 .	2 4 to 8	NU 217 NU 218	6217 C3 6218 C3		
315	1MJ8 31 .	2 4 to 8	6316 C3 6320 C3	6316 C3 6320 C3	6316 C3 6320 C3	**Fig. 13**
355	1MJ8 35 .	2 4 to 8	6316 C3 6320 C3	6316 C3 6320 C3	6316 C3 6320 C3	
355	1MJ1 35 .	2 4 to 8	6316 C4 6320 C3	6316 C4 6320 C3	7316 B 7320 B	**No figure**
400	1MJ1 40 .	2 4 to 8	6317 C4 6322 C3	6317 C4 6322 C3	7317 B 7322 B	
450	1MJ1 45 .	2 4 to 8	6318 C4 6324 C3	6318 C4 6324 C3	7318 B 7324 B	

Bearings (continued)

Selection of bearings for 1LA, 1MA, and 1MJ motors, bearings for high cantilever forces, Order Code K20

Please enquire about 1MJ8 and 1MJ1 motors

For motors Frame size	Type 1LA5 . . . 1LA6 . . . 1LA7 . . . 1LA9 . . . 1MA6 . . . 1MA7 . . .	Number of poles	**Drive-end bearing**		**Non-drive end bearing**	
			Horizontal motors	Vertical motors	Horizontal motors	Vertical motors
100	. . . . 10 .	all	6306 ZC3		6205 2ZC3 [4])	
112	. . . . 11 .	all	6306 ZC3		6205 2ZC3 [4])	
132	. . . . 13 .	all	6308 ZC3		6208 2ZC3 [4])	
160	. . . . 16 .	all	6309 ZC3		6209 2ZC3 [4])	
180	. . . . 18 .	all	6310 ZC3		6210 ZC3	
200	. . . . 20 .	all	6312 ZC3		6212 ZC3	
225	. . . . 22 .	all	NU 213 E [3]) (6313 ZC3) [2])		6212 ZC3	
250	 253	all	NU 215 E [3])		6215 ZC3	
280	. . . . 28 .	2 4 to 8	NU 216 E NU 317 E [3])		6216 C3 6317 C3	
315 S 315 M	. . . . 310 313	2 4 to 8	NU 217 E [3]) NU 319 E [3])		6217 C3 6319 C3	
315 L	. . . . 316 . . . . 317 318	2 4 to 8	NU 217 E [3]) NU 319 E [3])	– NU 319 E [1])	6217 C3 6319 C3	– 6319 C3
	1LA8 . . .					
315	. . . . 31 .	4 to 8	NU 320 E	On request	6218 C3	On request
355	. . . . 35 .	4 to 8	NU 322 E	On request	6220 C3	On request
	1MJ6 . . .					
180	. . . . 18 .	all	NU 210		6210 ZC3	
200	. . . . 20 .	all	NU 212		6212 ZC3	
	1MJ7 . . .					
225	. . . . 22 .	all	NU 213		6213 C3	
250	 253	all	NU 215		6215 C3	

Noise and vibration data on request.

A minimum cantilever force is required for NU bearings as compared with standard bearings.

The bearing selection tables are only intended for planning purposes. Authoritative information on the actual type of bearings fitted in motors already supplied can be obtained from the factory by quoting the serial number.

When deep-groove ball bearings with sideplates are used, the sideplate is on the inside. 1MJ8 motors for 60 Hz on request.

1) Only for 50 Hz.

2) Bracketed data for 1LA5.

3) Also deep-groove ball bearings of the dimension series 03 are possible (Order Code **K36**).

4) For regreasing designs (Order Code **K40**), bearings with a deep-groove bearing are used.

Bearings (continued)

Selection of bearings for 1LG4/6 motors, bearings for high cantilever forces, Order Code K20

For motors Frame size	Type 1LG4 . . . 1LG6 . . .	Number of poles	**Drive-end bearing** Horizontal motors	Vertical motors	**Non-drive end bearing** Horizontal motors	Vertical motors	Fig. No. on page 2/34
180 M 180 L	. . . . 18 .	all	NU210		6210 C3		**Fig. 4**
200 L	. . . . 20 .	all	NU212		6212 C3		
225 S 225 M	. . . . 22 .	all	NU213		6213 C3		
250 M	. . . . 25 .	all	NU215		6215 C3		
280 S 280 M	. . . . 28 .	2 4 to 8	NU217 NU317		6217 C3 6317 C3		**Fig. 5**
315 S 315 M	. . . . 310 313	2 4 to 8	NU219 [3]) NU319		6219 C3 6319 C3		
315 L	. . . . 316 . . . . 317 318	2 4 to 8	NU219 [3]) NU319		6219 C3 6319 C3		

Bearings for 1LG4/6 motors, strengthened deep-groove ball bearings on both sides, Order Code K36

For motors Frame size	Type 1LG4 . . . 1LG6 . . .	Number of poles	**Drive-end bearing** Horizontal motors	Vertical motors	**Non-drive end bearing** Horizontal motors	Vertical motors	Fig. No. on page 2/34
180 M 180 L	. . . . 18 .	all	6310 ZC3 [1])		6310 ZC3 [1])		**Fig. 4**
200 L	. . . . 20 .	all	6312 ZC3 [1])		6312 ZC3 [1])		
225 S 225 M	. . . . 22 .	all	6313 ZC3 [1])		6313 ZC3 [1])		
250 M	. . . . 25 .	all	6315 ZC3 [1])		6315 ZC3 [1])		
280 S 280 M	. . . . 28 .	2 4 to 8	– 6317 C3 [2])		– 6317 C3 [2])		**Fig. 5**
315 S 315 M 315 L	. . . . 31 .	2 4 to 8	6316 C3 6319 C3 [2])		6316 C3 6319 C3 [2])		

1) For regreasing designs (Order Code **K40**), bearings without a deep-groove bearing are used.

2) As standard version.

3) Only for 50 Hz.

Bearings (continued)

Diagrams of bearings

Fig. 1 **Drive-end bearing** **Non-drive end bearing**

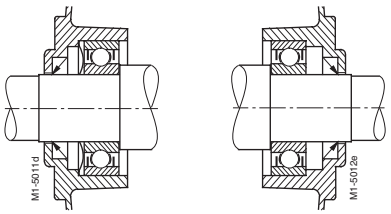

Fig. 2 **Drive-end bearing** **Non-drive end bearing**

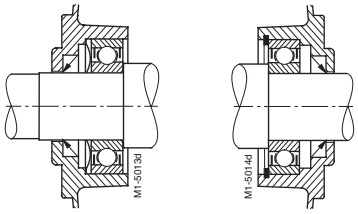

Fig. 3 **Drive-end bearing** **Non-drive end bearing**

Located bearings for 1LA7/1LA9/1MA7, frame sizes 56 to 160

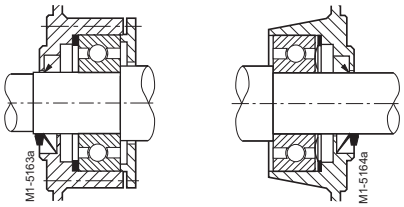

Located bearings for 1LA5, frame sizes 180 to 225
1LA9, 1MA6, frame sizes 180 to 200

Fig. 4 **Drive-end bearing** **Non-drive end bearing**

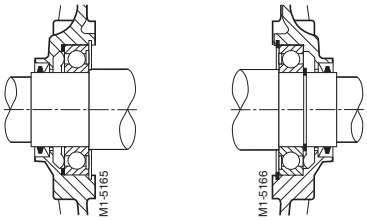

Fig. 5 **Drive-end bearing** **Non-drive end bearing**

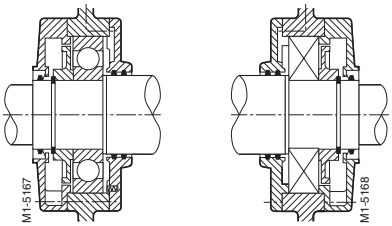

Frame sizes
280 S to 315 L, 2- to 8-pole

Fig. 6 **Drive-end bearing** **Non-drive end bearing**

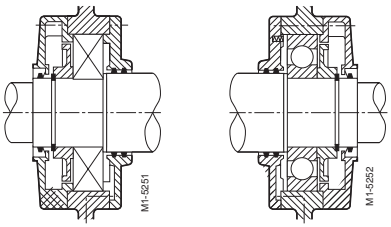

Frame sizes
315 to 450, 2- to 8-pole, IM B3

Fig. 7 **Drive-end bearing** **Drive-end bearing** **Non-drive end bearing**

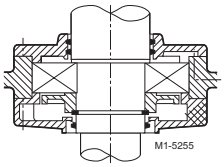

Frame sizes
315, 2- to 8-pole, IM V1

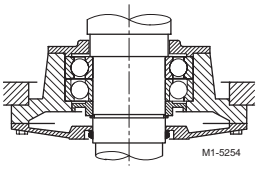

Frame sizes
355 and 450, 2- to 8-pole, IM V1

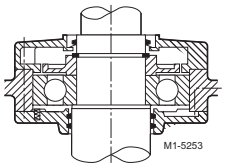

Frame sizes
315 to 450, 2- to 8-pole, IM V1

Bearings (continued)

Diagrams of bearings

Fig. 8 Drive-end bearing | Non-drive end bearing

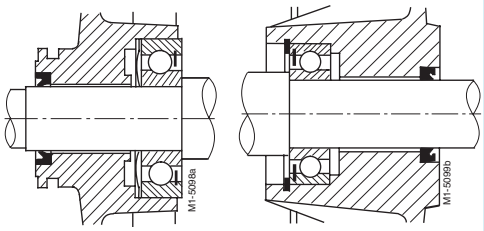

Fig. 9 Drive-end bearing | Non-drive end bearing

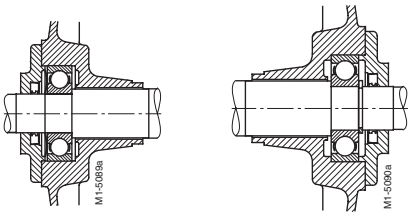

Fig. 10 Drive-end bearing | Non-drive end bearing

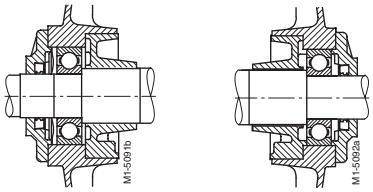

Fig. 11 Drive-end bearing | Non-drive end bearing

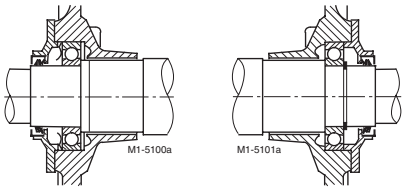

Fig. 12 Drive-end bearing | Non-drive end bearing

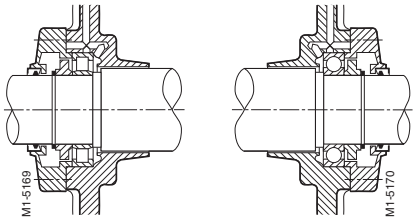

Fig. 13 Drive-end bearing | Non-drive end bearing

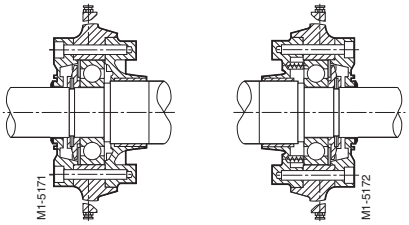

Drive-end and non-drive-end bearings
from frame size 315
Outer bearing seal
for frame size 400 and 450
with labyrinth gland

Maximum cantilever forces

Maximum cantilever forces, basic design

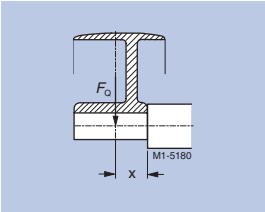

The values for the maximum cantilever force F_Q (N) with a radial load are based on the assumption that the line of force (i.e. the centreline of the pulley) is still within the free shaft extension (dimension x).

Dimension x (mm) is the distance from the shoulder of the shaft to the line of action of the force F_Q. Dimension $x_{max.}$ is thus the length of the shaft extension.

Total cantilever force $F_Q = c \cdot F_u$

The pretensioning factor c is an empirical value determined by the belt manufacturer. It can be approximated as follows:

For normal flat leather belts with an idler pulley $c = 2$;
for V-belts $c = 2$ to 2.5;
for special synthetic belts (depending on the type and load) $c = 2$ to 2.5.

The peripheral force F_u (N) can be calculated from the following equation

$$F_u = 2 \cdot 10^7 \frac{P}{n \cdot D}$$

F_u Peripheral force in N
P Motor rated output (transmitted power) in kW
n Motor rated speed in rpm
D Belt pulley diameter in mm

Standard belt pulleys conforming to DIN 2211, Sheet 3.

The maximum cantilever forces for 60 Hz are approx. 80% of the 50 Hz values (please enquire).

Maximum cantilever forces for 50 Hz, basic version
Valid is: x_0 values for x = 0 and $x_{max.}$ values for x = l (l = shaft extension)

For motors		Max. cantilever force at x_0			Max. cantilever force at $x_{max.}$		
Size	No. of poles	Type 1LA5 1LA7 1LA9 1MA6 1MA7 1LA6	1LG4 1LG6	1MJ6 1MJ7	Type 1LA5 1LA7 1LA9 1MA6 1MA7 1LA6	1LG4 1LG6	1MJ6 1MJ7
		N	N	N	N	N	N
56 M	2	270	–	–	240	–	–
	4	350	–	–	305	–	–
	6	415	–	–	360	–	–
63 M	2	270	–	–	240	–	–
	4	350	–	–	305	–	–
	6	415	–	–	360	–	–
71 M	2	415	–	415	355	–	355
	4	530	–	530	450	–	450
	6	630	–	630	535	–	535
	8	690	–	–	585	–	–
80 M	2	485	–	485	400	–	400
	4	625	–	625	515	–	515
	6	735	–	735	605	–	605
	8	815	–	–	675	–	675
90 S 90 L	2	725	–	725	605	–	605
	4	920	–	920	775	–	775
	6	1090	–	1090	910	–	910
	8	1230	–	1230	1030	–	1030
100 L	2	1030	–	1030	840	–	840
	4	1310	–	1310	1060	–	1060
	6	1550	–	1550	1250	–	1250
	8	1720	–	1720	1400	–	1400
112 M	2	1010	–	1680	830	–	1490
	4	1270	–	1960	1040	–	1580
	6	1520	–	2140	1240	–	1720
	8	1690	–	2450	1380	–	1950
132 S 132 M	2	1490	–	2250	1180	–	1820
	4	1940	–	2720	1530	–	2170
	6	2260	–	3100	1780	–	2420
	8	2500	–	3400	1980	–	2700
160 M 160 L	2	1540	–	2800	1210	–	2250
	4	2040	–	3330	1590	–	2600
	6	2330	–	3750	1820	–	2900
	8	2660	–	3750	2080	–	2900
180 M 180 L	2	2000	1780	2000	1550	1410	1550
	4	2350	2240	2350	1950	1820	1950
	6	2800	2550	2800	2250	2120	2250
	8	3050	2860	3050	2500	2330	2500
200 L	2	2550	2380	2550	2100	1930	2100
	4	3350	3050	3350	2750	2530	2750
	6	3900	3500	3900	3200	2930	3200
	8	4150	3800	4150	3450	3210	3450
225 S 225 M	2	3050	2820	3050	2550	2290	2550
	4	3750	3500	3750	2950	2760	2950
	6	4550	4050	4550	3600	3240	3600
	8	4850	4500	4850	3900	3500	3900

Maximum cantilever forces for 50 Hz, basic version
Valid is: x_0 values for x = 0 and $x_{max.}$ values for x = l (l = shaft extension)

For motors		Max. cantilever force at x_0			Max. cantilever force at $x_{max.}$		
Size	No. of poles	Type 1LG4 1LG6	1MA6	1MJ6 1MJ7	Type 1LG4 1LG6	1MA6	1MJ6 1MJ7
		N	N	N	N	N	N
250 M	2	3190	3650	3650	2530	2950	2950
	4	4000	4400	4400	3350	3600	3600
	6	4700	5350	5350	3900	4350	4350
	8	5200	5700	5700	4400	4700	4700
280 S 280 M	2	4000	3350	8100	3250	2800	6700
	4	8400	8400	9700	7000	7200	8050
	6	9700	10000	11700	8100	8900	9700
	8	10750	11000	12800	9000	9850	10600
315 S 315 M	2	4750	3950	9000	3890	3350	7600
	4	9100	9900	13100	7300	8100	10800
	6	10700	12100	15600	8700	9900	12800
	8	11600	13300	16900	9600	10900	13900
315 L	2	4000	3100	8800	3280	2700	7600
	4	8400	8800	24000	7500	7450	12000
	6	9700	11400	25000	9100	9600	12000
	8	11100	12500	26000	10200	10500	12000
		1LA8	1MJ8 1MJ1 [1])		1LA8	1MJ8 1MJ1 [1])	
315 to 450	2 to 8	see diagrams page 2/38			see diagrams page 2/38		

1) Data for 1MJ1 available soon

For 1LA8 motors with horizontal design, the permitted cantilever forces are given in dependence on the axial forces.

Please note that in the case of the IM B 6, IM B 7, IM B 8, IM V 5, and IM V 6 types of construction, the belt tension is only allowed to act parallel to or towards the mounting plane and the feet must be braced. Both feet must be secured for foot-mounting types of construction.

Refer to pages 2/37 to 2/39 if the cantilever forces are higher than those listed above.

Maximum cantilever forces (continued)

Bearings for increased cantilever forces

Maximum cantilever forces for 50 Hz for type 1LA, 1MA, and 1MJ motors
Deep-groove bearings at drive-end (DE) – Order Code K20

For motors Size	Type 1LA5 . . . 1LA6 1LA7 . . . 1LA9 . . . 1MA6 . . . 1MA7 1MJ6 . . . 1MJ7 . . .	Number of poles	Max. cantilever force at F_Q at x_0 N	at $x_{max.}$ N
100	. . . . 10 .	2	1680	1490
		4	1960	1580
		6	2140	1720
		8	2450	1950
112	 113	2	1680	1490
		4	1960	1580
		6	2140	1720
		8	2450	1950
132	. . . . 13 .	2	2250	1820
		4	2720	2170
		6	3100	2420
		8	3400	2700
160	. . . . 16 .	2	2800	2250
		4	3330	2600
		6	3750	2900
		8	3750	2900
180	. . . . 18 .	2	3700	3000
		4	4450	3600
		6	5100	4150
		8	5550	4500
200	. . . . 20 .	2	5200	4300
		4	6450	5350
		6	7300	6100
		8	7900	6550

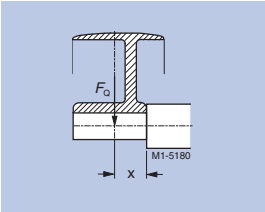

Maximum cantilever forces for 50 Hz for type 1LA, 1MA, and 1MJ motors
Parallel roller bearings at drive-end (DE) – Order Code K20

For motors Size	Type 1LA5 . . . 1LA6 . . . 1MA6 . . . 1MJ6 . . . 1MJ7	Number of poles	Max. cantilever force at F_Q at x_0 N	at $x_{max.}$ N
225	. . . . 22 .	2	8100	6800
		4	9800	7800
		6	11200	8800
		8	12200	9700
250	. . . . 25 .	2	9600	7900
		4	11600	9600
		6	13200	10800
		8	14400	11800
280 [1])	. . . . 28 .	2	10000	8400
315 S [1]) 315 M [1])	. . . . 310 313	2	12000	10200
315 L [1])	 316	2	11800	10200
	 317		(horizontal motors)	

Please note that in the case of the IM B 6, IM B 7, IM B 8, IM V 5, and IM V 6 types of construction, the belt tension is only allowed to act parallel to or towards the mounting plane and the feet must be braced.

Maximum cantilever forces at 50 Hz for type 1LG motors
Parallel roller bearings at drive-end (DE) – Order Code K20

Valid is: x_0 values for x = 0 and $x_{max.}$ values for x = l (l = shaft extension)

For motors Size	Type 1LG4 . . . 1LG6 . . .	Number of poles	Max. cantilever force at F_Q at x_0 N	at $x_{max.}$ N
180 M 180 L	. . . . 18 .	2	4550	3600
		4	5650	4050
		6	6350	4050
		8	6950	4050
200 L	. . . . 20 .	2	6600	5350
		4	8200	6850
		6	9300	6300
		8	10100	7400
225 S 225 M	. . . . 22 .	2	7500	6250
		4	9150	7200
		6	10400	7400
		8	11300	7350
250 M	. . . . 25 .	2	9100	7300
		4	11300	9300
		6	12800	10500
		8	14100	10500
280 S 280 M	. . . . 28 .	2	11400	9350
315 S 315 M	. . . . 310 313	2	14700	12300
315 L	. . . . 316 317	2	14600	12700

Maximum cantilever forces at 50 Hz for type 1LG motors
Deep-groove bearings strengthened on both sides DE/NDE – Order Code K36

Valid is: x_0 values for x = 0 and $x_{max.}$ values for x = l (l = shaft extension)

For motors Size	Type 1LG4 . . . 1LG6 . . .	Number of poles	Max. cantilever force at F_Q at x_0 N	at $x_{max.}$ N
180 M 180 L	. . . . 18 .	2	3280	2600
		4	4150	3430
		6	4750	3950
		8	5250	4050
200 L	. . . . 20 .	2	4350	3500
		4	5550	4550
		6	6350	5350
		8	7000	5900
225 S 225 M	. . . . 22 .	2	4850	3950
		4	6100	4850
		6	7050	5650
		8	7750	6150
250 M	. . . . 25 .	2	5800	4600
		4	7400	6050
		6	8500	7050
		8	9350	7850
280 S 280 M	. . . . 28 .	2	–	–
315 S 315 M	. . . . 310 313	2	5650	4650
315 L	. . . . 316 317	2	5350	4650

1) Does not apply to 1MJ motors with frame sizes 280 to 315 (standard design).

Maximum cantilever forces (continued)

Maximum cantilever forces at 50 Hz for type 1LA8 motors, basic version

Frame size 315, 1LA8 – Design IM B3

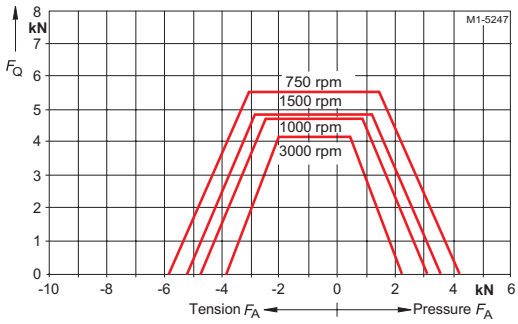

Cantilever force F_Q at x = l (shaft extension) via axial force F_A at nominal bearing service life L_{h10} = 20000 h

Frame size 355, 1LA8 – Design IM B3

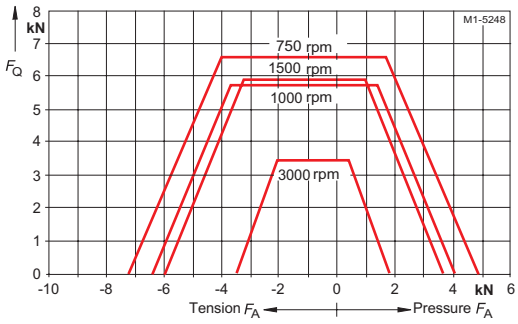

Cantilever force F_Q at x = l (shaft extension) via axial force F_A at nominal bearing service life L_{h10} = 20000 h

Frame size 400, 1LA8 – Design IM B3

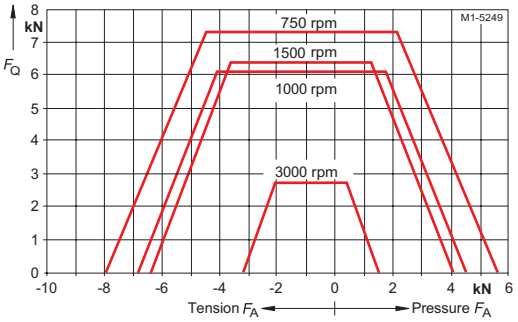

Cantilever force F_Q at x = l (shaft extension) via axial force F_A at nominal bearing service life L_{h10} = 20000 h

Frame size 450, 1LA8 – Design IM B3

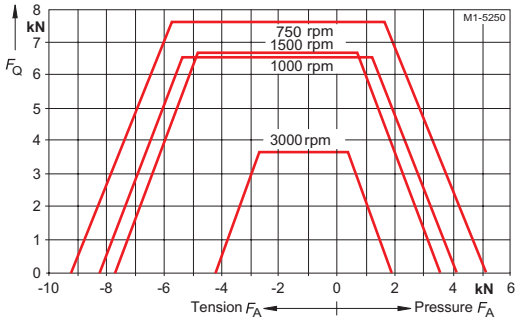

Cantilever force F_Q at x = l (shaft extension) via axial force F_A at nominal bearing service life L_{h10} = 20000 h

Maximum cantilever forces at 50 Hz for type 1MJ8 motors, basic version

Frame size 315, 1MJ8

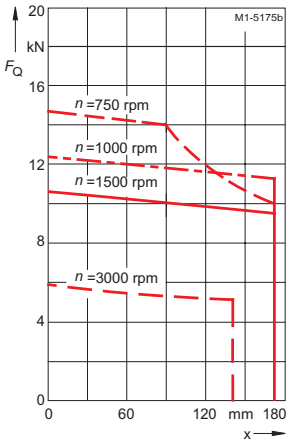

Frame size 355, 1MJ8

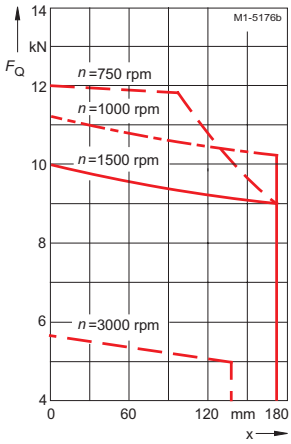

Maximum cantilever forces (continued)

Maximum cantilever forces at 50 Hz for 1LA, 1LG, and 1MA motors, bearings for high cantilever forces, Order Code K20

Frame size 315, 1 LA8 – Design IM B 3

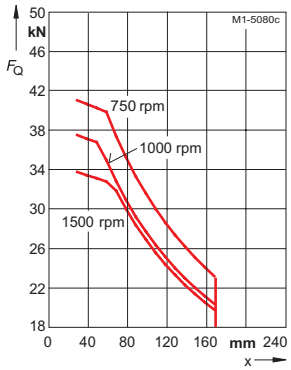

Minimum cantilever force at shaft extension 10 kN

Frame size 355, 1 LA8 – Design IM B 3

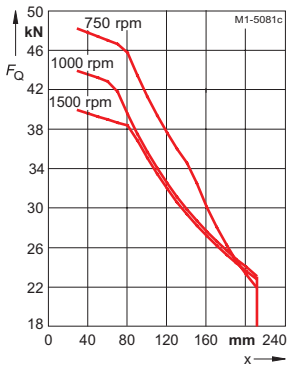

Minimum cantilever force at shaft extension 13 kN

Frame size 280, 4- to 8-pole, 1LG4/1LG6

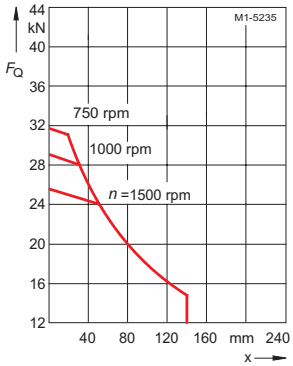

Frame size 315 L, 4- to 8-pole, 1LG4/1LG6

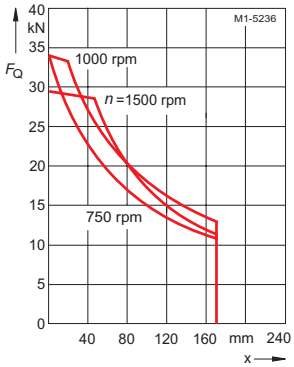

Frame size 315S/M, 4- to 8- pole, 1LG4/1LG6

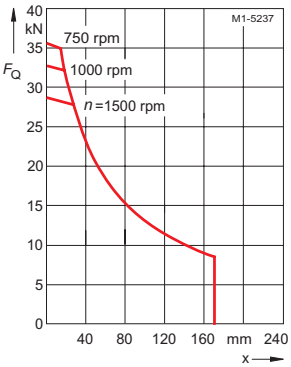

Frame size 280, 4- to 8-pole, 1MA6

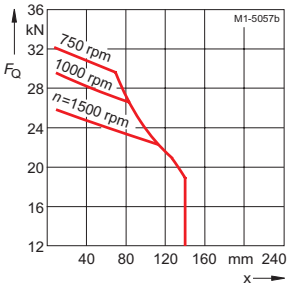

Frame size 315S/M, 4- to 8-pole, 1MA6

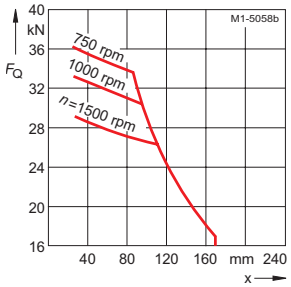

Frame size 315L, 4- to 8-pole, 1MA6

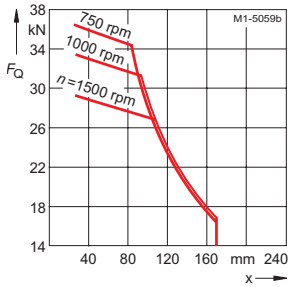

Mechanical design

2

Maximum axial load

Vertical 1LA, 1MA, and 1MJ motors

Size	With shaft extension															
	3000 rpm				1500 rpm				1000 rpm				750 rpm			
	downwards		**upwards**		**downwards**		**upwards**		**downwards**		**upwards**		**downwards**		**upwards**	
	Load down N	up N	Load down N	up N	Load down N	up N	Load down N	up N	Load down N	up N	Load down N	up N	Load down N	up N	Load down N	up N
56	80	245	230	95	80	330	310	95	80	410	390	95	–	–	–	–
63	80	245	230	95	80	330	310	95	80	410	390	95	–	–	–	–
71	105	365	335	130	90	380	440	130	90	590	550	130	90	700	660	130
80	110	425	360	160	100	540	480	165	100	650	590	165	100	760	700	165
90	110	440	360	180	100	680	580	190	100	920	820	190	100	1150	1050	190
100	140	700	550	280	130	990	820	285	130	1280	1110	285	130	1560	1390	285
112	140 (140)*	710 (1050)*	550 (800)*	300 (300)*	130 (130)*	1000 (1350)*	820 (1100)*	310 (300)*	130 (130)*	1290 (1720)*	1110 (1500)*	310 (310)*	130 (130)*	1570 (2000)*	1390 (1850)*	310 (310)*
132	200 (1500)*	1200 (1550)*	950 (1300)*	470 (470)*	180 (1500)*	1680 (2100)*	1200 (1600)*	470 (470)*	180 (280)*	1900 (2400)*	1600 (2100)*	470 (470)*	190 (290)*	2200 (2800)*	1900 (2400)*	440 (440)*
160	1500 (2000)*	1400 (1720)*	950 (1300)*	1900 (2500)*	1900 (2500)*	1800 (2400)*	1300 (1720)*	2200 (2800)*	2200 (2800)*	2200 (2800)*	1600 (2130)*	2700 (3600)*	2700 (3600)*	2700 (3600)*	1950 (2600)*	2900 (3700)*

Vertical 1LG motors, basic version

For motors		With shaft extension downwards							
Size	Type	3000 rpm		1500 rpm		1000 rpm		750 rpm	
	1LG4 . . . 1LG6 . . .	Load down N	Load up N	Load down N	Load up N	Load down N	Load up N	Load down N	Load up N
180 M	 183	1140	1150	1500	1600	–	–	–	–
180 L	 186	–	–	1380	1630	1650	2000	2020	2250
	 188	1140	1190	1390	1650	1640	2030	1880	2280
200 L	 206	1610	1480	–	–	2420	2550	–	–
	 207	1510	1530	2030	2100	2220	2610	2610	2970
	 208	1510	1590	1990	2120	2210	2680	2600	3060
225 S	 220	–	–	2110	2690	–	–	2830	3710
225 M	 223	1540	1990	1920	2770	2260	3300	2620	3770
	 228	1540	2070	1950	2840	2240	3430	2610	3880
250 M	 253	1680	2760	2110	3740	2740	4350	3070	4920
250 M	 258	1660	2870	2110	3960	2740	4520	3070	5160
280 S	 280	390	4670	3190	8200	4510	9290	5510	10300
280 M	 283	100	4780	2790	8340	4210	9450	5200	10400
	 288	100	4950	2700	8570	4170	9600	5160	10600
315 S	 310	840	6330	3380	10200	4760	11500	5860	12600
315 M	 313	530	6490	2870	10500	4200	11800	5420	12900
315 L	 316	8830	590	2450	11000	3680	12300	4800	13400
	 317	8410	690	1800	11400	3100	12800	4410	13900
	 318	8170	800	1620	12000	2690	13400	3820	14300

Values shown without assuming a cantilever force on the shaft end.

* Bracketed values with frame sizes 112 to 160 apply to 1MJ6 motors.

Maximum axial load (continued)

Horizontal 1LA, 1MA, and 1MJ motors

Size	3000 rpm				1500 rpm				1000 rpm				750 rpm			
	Tensile load	Thrust load (N) with radial load at		without radial load	Tensile load	Thrust load (N) with radial load at		without radial load	Tensile load	Thrust load (N) with radial load at		without radial load	Tensile load	Thrust load (N) with radial load at		without radial load
	N	x_0	$x_{max.}$		N	x_0	$x_{max.}$		N	x_0	$x_{max.}$		N	x_0	$x_{max.}$	
56	90	120	90	240	90	140	110	320	90	170	120	400	–	–	–	–
63	90	120	90	240	90	140	110	320	90	170	120	400	–	–	–	–
71	120	150	120	350	120	210	150	460	120	260	180	570	120	300	210	680
80	140	190	150	400	140	300	260	510	140	330	280	620	140	340	290	730
90	150	300	280	400	150	400	360	630	150	480	430	870	150	550	500	1100
100	220	450	350	630	220	600	500	910	220	650	550	1200	220	750	650	1480
112	220 (220)*	450 (850)*	350 (700)*	630 (1050)*	220 (220)*	600 (1150)*	500 (1000)*	910 (1350)*	220 (220)*	650 (1300)*	550 (1150)*	1200 (1720)*	220 (220)*	750 (1450)*	650 (1300)*	1480 (2000)*
132	350 (350)*	650 (1000)*	520 (900)*	1200 (1550)*	350 (350)*	850 (1250)*	700 (1150)*	1600 (2100)*	350 (350)*	1020 (1500)*	890 (1400)*	1900 (2400)*	350 (350)*	1150 (1750)*	1020 (1650)*	2200 (2800)*
160	1500 (2100)*	850 (1280)*	720 (1100)*	1500 (2100)*	1500 (2100)*	1050 (1680)*	920 (1700)*	1800 (2350)*	1500 (2100)*	1250 (2050)*	1120 (1920)*	2200 (2900)*	1500 (2100)*	1350 (2400)*	1220 (2200)*	2600 (3300)*

Horizontal 1LG motors, basic version

For motors		3000 rpm		1500 rpm		1000 rpm		750 rpm	
Size	Type	Loading direction		Loading direction		Loading direction		Loading direction	
	1LG4 . . . 1LG6 . . .	Tension	Thrust	Tension	Thrust	Tension	Thrust	Tension	Thrust
		N	N	N	N	N	N	N	N
180 M	 183	1550	790	1950	1190	–	–	–	–
180 L	 186	–	–	1890	1130	2220	1460	2470	1710
	 188	1550	790	1900	1140	2220	1460	2460	1700
200 L	 206	2150	990	–	–	3090	1940	–	–
	 207	2130	970	2670	1520	3030	1880	3410	2260
	 208	2130	970	2630	1480	3020	1870	3410	2250
225 S	 220	–	–	2950	1920	–	–	3820	2790
225 M	 223	2320	1290	2910	1880	3360	2330	3760	2740
	 228	2320	1290	2910	1880	3350	2320	3760	2730
250 M	 253	2510	1710	3150	2350	3750	2950	4180	3380
250 M	 258	2510	1710	3140	2340	3750	2950	4170	3370
280 S	 280	1790	3360	4970	6540	6180	7750	7170	8740
280 M	 283	1720	3290	4860	6430	6110	7680	7090	8660
	 288	1720	3290	4850	6420	6100	7670	7080	8650
315 S	 310	2610	4180	5520	7520	6830	8830	7940	9940
315 M	 313	2500	4070	5320	7320	6520	8520	7850	9850
315 L	 316	2450	4020	5230	7230	6370	8370	7520	9520
	 317	2320	3890	5050	7050	6110	8110	7350	9350
	 318	2300	3870	4950	6950	5950	7950	7080	9080

The maximum loads refer to 50 Hz. Please inquire about 60 Hz operation.

The figures for the maximum axial loads have been calculated assuming the maximum permitted cantilever forces.

Please ask for advice if the loading direction alternates (i.e. if the side from which the load is applied changes).

* Bracketed values with frame sizes 112 to 160 apply to 1MJ6 motors.

Mechanical design

2

Maximum axial load (continued)

Vertical 1LA, 1MA, and 1MJ motors

For motors		With shaft extension downwards															
		3000 rpm				1500 rpm				1000 rpm				750 rpm			
		Load down		Load up		Load down		Load up		Load down		Load up		Load down		Load up	
Size	Type 1LA5 . . . 1MA6 . . . 1MJ6 . . . 1MJ7 . . .	1LA5... 1MA6...	1MJ6... 1MJ7...	1LA5... 1MA6...	1MJ6... 1MJ7...	1LA5... 1MA6...	1MJ6... 1MJ7...	1LA5... 1MA6...	1MJ6... 1MJ7...	1LA5... 1MA6...	1MJ6... 1MJ7...	1LA5... 1MA6...	1MJ6... 1MJ7...	1LA5... 1MA6...	1MJ6... 1MJ7...	1LA5... 1MA6...	1MJ6... 1MJ7...
		N	N	N	N	N	N	N	N	N	N	N	N	N	N	N	N
180 M	 183	1150	1150	1900	1900	1400	1400	2350	2350	–	–	–	–	–	–	–	–
180 L	 186	–	–	–	–	1400	1400	2400	2400	1700	1700	2850	2850	2000	2000	3150	3150
200 L	 206	1650	1650	2750	2750	–	–	–	–	2550	2550	3950	3950	–	–	–	–
	 207	1550	1550	2800	2800	2000	2000	3350	3350	2400	2400	3950	3950	2800	2800	4500	4500
225 S	 220	–	–	–	–	2300	2300	3020	3020	–	–	–	–	3200	3200	4080	4080
225 M	 223	1890	1890	2190	2190	2180	2180	3060	3060	2700	2700	3500	3500	3040	3040	4120	4120
250 M	 253	1750	1750	2790	2790	2160	2160	3760	3760	2740	2740	4340	4340	2990	2990	4890	4890
280 S	 280	380	1150	4480	3850	3830	1350	8790	4950	5340	2350	10000	5650	6280	2850	11000	6250
280 M	 283	180	900	4580	3900	3550	1000	8910	5000	5000	2000	10100	5700	5930	2450	11100	6300
315 S	 310	210	900	5270	4500	3700	1700	10200	6400	5150	2300	11700	7050	6520	3400	13000	7950
315 M	 313	100	650	5350	4550	3330	1600	10400	6900	4740	2050	11700	7500	5801	2800	13000	8400
315 L	 316	9270	–	770	–	2330	–	10400	–	3650	–	11700	–	4630	–	13000	–
	 317	9270	–	840	–	1370	–	10800	–	2990	–	11600	–	3760	–	13000	–
	 318	9270	–	840	–	1370	–	10800	–	2990	–	11600	–	3760	–	13000	–
	1LA8 . . .																
		N		N		N		N		N		N		N		N	
315	 315	1900		5240		2790		6930		3060		8600		3850		9390	
	 317	1440		5680		2280		7420		2390		9230		3190		10030	
355	 353	8480		5570		14550		7900		–		–		–		–	
	 355	8180		5860		14200		8240		15690		10650		17840		11650	
	 357	7530		6500		13400		9030		14540		11780		16690		12780	
400	 403	6780		7260		17640		11160		19500		14160		22260		15330	
	 405	6330		7700		17040		11750		18750		14910		21510		16070	
	 407	5930		8100		16340		12440		17900		15750		20660		16910	
450	 453	5330		9650		17720		13020		19950		16250		23040		17550	
	 455	4730		10250		17020		13720		19050		17140		22140		18440	
	 457	4130		10840		16270		14460		18000		18180		21090		19480	

Values shown without assuming a cantilever force on the shaft end.

■ The maximum loads refer to 50 Hz. Please inquire about 60 Hz operation.

The figures for the maximum axial loads have been calculated assuming that standard coupling types are used for the drive. For suppliers, see catalogue section "Accessories and Repair parts".

Please enquire about 1MJ8 and 1MJ1 motors.

Please ask for advice if the loading direction alternates.

Maximum axial load (continued)

Horizontal 1LA, 1MA, and 1MJ motors

For motors		3000 rpm		1500 rpm		1000 rpm		750 rpm	
		Loading direction		Loading direction		Loading direction		Loading direction	
Size	Type 1LA5 . . . 1MA6 . . . 1MJ6 . . . 1MJ7 . . .	Tension	Thrust	Tension	Thrust	Tension	Thrust	Tension	Thrust
		N	N	N	N	N	N	N	N
180 M	 183	1400	1400	1700	1700	–	–	–	–
180 L	 186	–	–	1700	1700	2050	2050	2400	2400
200 L	 206	2000	2000	–	–	3000	3000	–	–
	 207	1950	1950	2450	2450	2900	2900	3400	3400
225 S	 220	–	–	2980	1960	–	–	3880	2860
225 M	 223	2390	1370	2900	1880	3380	2360	3810	2790
250 M	 253	2450	1655	3070	2270	3620	2820	4000	3200
280 S	 280	1330 (3700)*	2900 (2100)*	5080 (4200)*	6740 (2600)*	6410 (5000)*	8070 (3400)*	7390 (5550)*	9050 (3950)*
280 M	 283	1200 (3600)*	2800 (2000)*	4990 (4000)*	6650 (2400)*	6260 (4800)*	7920 (3200)*	7220 (5350)*	8880 (3750)*
315 S	 310	1500 (3800)*	3160 (2200)*	5350 (4900)*	7450 (3300)*	6740 (5500)*	8810 (3900)*	8010 (6500)*	10110 (4900)*
315 M	 313	1400 (3650)*	3180 (2050)*	5260 (4900)*	7360 (3300)*	6560 (5450)*	8660 (3850)*	7690 (6250)*	9790 (4650)*
315 L	 316	1080	2740	4580	6680	5770	7870	6820	8920
	 317	940	2600	4170	6270	5410	7510	6410	8510
	 318	940	2600	4170	6270	5410	7510	6410	8510

The maximum loads refer to 50 Hz. Please inquire about 60 Hz operation.

The figures for the maximum axial loads have been calculated assuming that standard coupling types are used for the drive. For suppliers, see catalogue section "Accessories and Repair parts".

Please enquire about 1MJ8 and 1MJ1 motors.

Please ask for advice if the loading direction alternates.

For 1LA8 motors with horizontal design, the permitted cantilever forces are given in dependence on the axial forces, see Page 2/38.

* Bracketed values with frame sizes 280 S to 315 M apply to 1MJ7 motors.

Converter-fed operation

In general, all motors are suitable for converter-fed operation. Some motors require special measures.

The planning notes for drives with a constant or square-law counter-torque are contained in the following catalogues:

MICROMASTER:
Catalogue series DA 64 and DA 51

SIMOVERT MASTERDRIVES:
Catalogue series DA 65

These catalogues also contain tables showing which squirrel-cage motors should be assigned to which SIMOVERT converter, depending on the load characteristic of the driven machine.

■ All data specified in Catalogue M11 applies to 50 Hz supply systems.

Attention should be paid to the reduction factors for constant-torque drives, pump drives and compressor drives.

Motor temperature detection

KTY 84 temperature sensor:

Order Code:
A23 = 1 x KTY 84-130,
A25 = 2 x KTY 84-130

This sensor is a PTC thermistor. Its resistance varies as a function of the temperature in accordance with a defined curve.

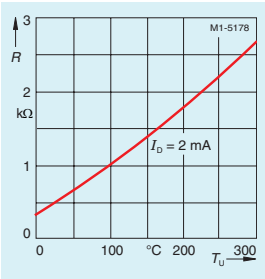

Some Siemens converters calculate the motor temperature according to the resistance of the temperature sensor. They can be set to a user-definable temperature for alarms and tripping.
The 1LA8 motors are supplied without the standard PTC thermistor if Order Code **A23** is specified.

The temperature sensor is embedded in the motor winding overhang in the same way as a PTC thermistor. The evaluation is effected by the converter, for example.

The 3RS10 temperature monitoring device belonging to the protection device can be ordered separately for mains-fed operation. For further details see Catalogue CA 01 Order No. E86060-D4001-A110-C1-7600.

Motor protection
All standard 1LA and 1LG motors for Zones 2, 21, and 22 for converter-fed operation are already fitted with a PTC thermistor for tripping. It is also possible to order a PTC thermistor for alarm for converter-fed operation (Order Code **A10**).

Insulation

The insulation of 1LA and 1LG motors is such that they can operate unrestrictedly in converter-fed mode up to voltages of ≤ 500 V. The same applies to operation with pulse-controlled AC converters with voltage front times $t_s > 0.1\,\mu s$ at the motor terminals.

Providing these conditions are met, all motors with voltage codes 1, 3, 5, and 6 can be operated in converter-fed mode, except for those with voltage ratings of > 500 V to 690 V, which are supplied with special insulation for operation with a pulse-controlled AC converter (SIMOVERT MASTERDRIVES, MM440 > 500 V – 600 V) but without a converter circuit (d*u*/d*t* filter or sine filter) (10th position of the Order No. = **"M"**).

For operation with a converter at the outputs specified in the catalogue, the motors are utilized according to temperature class F. Order Codes **C11**, **C12** and **C13** are not possible.

Connection of the motors

In addition to the restrictions applying to mains-connected machines, the maximum permissible conductor cross-sections for the converter must also be kept in mind when the motors are connected.

Ventilation/ noise

Increased fan noise may occur in self-ventilated motors at speeds higher than the rated speed.
To increase motor utilization for low speeds, it is advisable to use separately ventilated motors such as 1LA5, 1LA7, 1LG, and 1LG6 with Order Code **G17** or motor 1PQ8.

Mechanical stress, grease life

Due to the higher speeds beyond the rated speed value and the resulting increased vibration, the mechanical balance quality changes and the bearings are under greater mechanical stress. This reduces the grease life and the bearing life. (enquire if necessary).

Bearings

To avoid damage by bearing currents, isolated bearings for frame sizes 225 to 315 are available and recommended for frame size 280 (Order Code **L27**)[1]). These are standard in 1LA8 motors for converter-fed operation on SIMOVERT MASTERDRIVES (9 th position of the Order No. = **"P"**).

1) For 1MJ7 motors, Order Code **L27** can be used for frame sizes 250 to 315.

Mechanical limit speeds n_{max} for maximum supply frequency f_{max}

Motor	2-pole		4-pole		6-pole		8-pole	
	$n_{max.}$ rpm	$f_{max.}$ Hz	$n_{max.}$ rpm	$f_{max.}$ Hz	$n_{max.}$ rpm	$f_{max.}$ Hz	$n_{max.}$ rpm	$f_{max.}$ Hz
1LA7/1LA9 056	6000	100	4200	140	3600	180	3000	200
1LA7/1LA9 063	6000	100	4200	140	3600	180	3000	200
1LA7/1LA9 071	6000	100	4200	140	3600	180	3000	200
1LA7/1LA9 080	6000	100	4200	140	3600	180	3000	200
1LA7/1LA9 090	6000	100	4200	140	3600	180	3000	200
1LA6/1LA7/1LA9 10 .	6000	100	4200	140	3600	180	3000	200
1LA6/1LA7/1LA9 113	6000	100	4200	140	3600	180	3000	200
1LA6/1LA7/1LA9 13 .	5600	90	4200	140	3600	180	3000	200
1LA6/1LA7/1LA9 16 .	4800	80	4200	140	3600	180	3000	200
1LA5/1LA9 18 .	4600	75	4200 (3800)	140 (126)	3600	180	3000	200
1LA5/1LA9 20 .	4500	75	4200 (3800)	140 (126)	3600	180	3000	200
1LA5 22 .	4500	75	4500 (3800)	150 (126)	4400 (3400)	220 (170)	4400 (3400)	293 (226)
1LA8 31 .	3600	60	3000 (2650)	100 (88)	2950 (2350)	147 (117)	2950 (2350)	196 (156)
1LA8 35 .	3600/3100 [1])	60/52 [1])	2500 (2350)	83 (78)	2500 (2100)	125 (105)	2500 (2100)	166 (140)
1LA8 40 .	3600/3100 [1])	60 52 [1])	2200/(2100) 2100 [1])	73/(70) 70 [1])	2200/(1900) 2100 [1])	110/(95) 105 [1])	2200/(1900) 2100 [1])	146/(126) 140 [1])
1LA8 45 .	3000	50	2100/(1900) 1800 [1])	70/(63) 60 [1])	2100/(1700) 1800 [1])	105/(85) 90 [1])	2100/(1700) 1800 [1])	140/ 120 [1])
1LG4/1LG6 18 .	4600	76	4200 (3400)	140 (113)	3600 (3400)	180 (170)	3000	200
1LG4/1LG6 20 .	4500	75	4200 (3400)	140 (113)	3600 (3400)	180 (170)	3000	200
1LG4/1LG6 22 .	4500	75	4500 (3400)	150 (113)	4400 (3400)	220 (170)	4400 (3400)	293 (226)
1LG4/1LG6 25 .	3900	65	3700 (3400)	123 (113)	3700 (3000)	185 (150)	3700 (3000)	247 (200)
1LG4/1LG6 28 .	3600	60	3000	100	3000 (2800)	150 (140)	3000 (2800)	200 (187)
1LG4/1LG6 310	3600	60	2600	87	2600	130	2600	176
1LG4/1LG6 313	3600	60	2600	87	2600	130	2600	173
1LG4/1LG6 316	3600/3000 [1])	60/50 [1])	2600	87	2600 (2500)	130 (125)	2600 (2500)	173 (167)
1LG4/1LG6 317	3600/3000 [1])	60/50 [1])	2600	87	2600 (2500)	130 (125)	2600 (2500)	173 (167)
1LG4/1LG6 318 .	–	–	–	–	2600 (2500)	130 (125)	2600 (2500)	173 (167)
1MJ6 07.	6000	100	3000	100	2000	100	1500	100
1MJ6 08.	6000	100	3000	100	2000	100	1500	100
1MJ6 09.	6000	100	3000	100	2000	100	1500	100
1MJ6 10.	5400	90	3000	100	2000	100	1500	100
1MJ6 11.	5400	90	3000	100	2000	100	1500	100
1MJ6 13.	4800	80	3000	100	2000	100	1500	100
1MJ6 16.	4500	75	3000	100	2000	100	1500	100
1MJ6 18.	5100	85	3000	100	2000	100	1500	100
1MJ6 20.	5100	85	3000	100	2000	100	1500	100
1MJ7 22 –	4500	75	3800	126	3400	170	3400	226
1MJ7 25 .	3900	65	3700	123	3400	170	3400	226
1MJ7 28 .	3600	60	3000	100	3000	150	3000	200
1MJ7 31 .	3600/3000 [1])	60/50 [1])	2600	87	2600	130	2600	173

The values in brackets apply to motors used in hazardous areas.

Exception:

For (E)Ex n on frequency converter (Order Code **M73**) f_{max} = 50 Hz.

1) For vertical mounting.

MICROMASTER 411/COMBIMASTER 411

The new MICROMASTER 411/ COMBIMASTER 411 series is included in Catalogue DA 51.3 which contains the complete product range with ordering data, technical details, and explanations.

Fields of application

The MICROMASTER 411 and COMBIMASTER 411 are the ideal solution for distributed drive applications which require a high degree of protection. The devices have been designed for a broad range of drives from simple individual applications for pumps and fans up to multiple conveyor drives in networked control systems.

The ECOFAST variants for the frequency converter series MICROMASTER 411/ COMBIMASTER 411 contain connectors for the power supply, communications interfaces, and motor connections to permit fast and problem-free replacement for time-critical applications, and are completely compatible with ECOFAST technology systems.

They are based on the universal MICROMASTER 420 converter series and distinguish themselves through customer-oriented performance and easy handling.

Design

The modular design makes it possible to select individual MICROMASTER 411/ COMBIMASTER 411 products including accessories, e.g. electromechanical brake controls or a PROFIBUS module.

Main characteristics

- Power range: 0.37 - 3.0 kW, 400 V, 3AC
- IP66 degree of protection (MICROMASTER 411), self-cooling
- Electrical isolation of electronics and connection terminals
- Parameter sets for fast commissioning and cost-saving
- Modular construction with many accessories
- Operation without operator panel possible (if jumpers and/or control potentiometers are used)
- Integrated control potentiometer which can be accessed from the outside.

Accessories (overview)

- Basic Operator Panel (BOP) for parameterizing a converter
- Clear text Advanced Operator Panel (AOP) for MICROMASTER 411 and COMBIMASTER 411 with multilingual display
- PROFIBUS module
- AS-Interface module
- DeviceNet module
- REM module (dynamic brake and control module for electromechanical brake)
- EM module (electromechanical brake control module)
- PC connecting set
- Assembly sets for fitting the operator panel
- PC commissioning programs.

ECOFAST

ECOFAST is a system which permits extensive decentralization and a modular structure for installation elements on the component level

(MICROSTARTER, COMBIMASTER 411, MICROMASTER 411 and motor connector (Order Code **G55**), alternatively EMC resistant motor connector (Order Code **G56**)).

Picture of the ECOFAST system

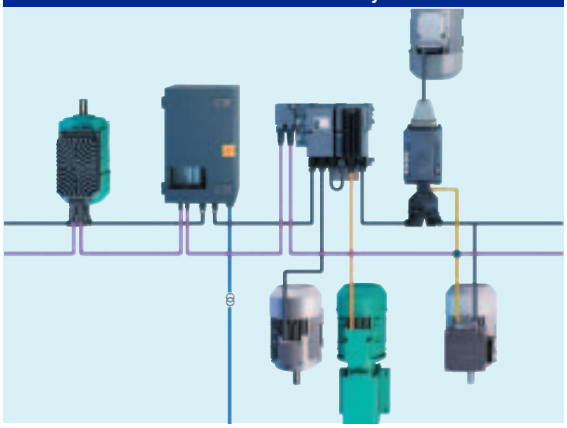

The main advantages of the ECOFAST motor terminal [1]) as compared with a terminal box are as follows:

- Fast assembly of I/O devices (e.g. motor starter) belonging to the ECOFAST system
- Reduction of assembly and repair times at end user
- No wiring errors due to connector technology
- Replacement of motor without affecting the electrics.

Further information can be found in the Catalogue IK PI and in the converter catalogue "Distributed drive solutions CM411" – DA 51.3

The ECOFAST motor terminal can be supplied for the following motors:

- Frame sizes 56 M to 132 M
- Power range 0.06 kW to 5.5 kW (7.5 kW on request)
- Direct on-line-starting: Voltage code 1 for 230 VΔ / 400 VY, 50 Hz
- Star-delta starting: Voltage code 9 with Order Code L1U 400 VΔ , 50 Hz

Note:
Only one sensor (temperature sensor or PTC thermistor) connectable.

Maximum permitted supply voltage at motor terminal: ≤ 500 V

Ordering example
Motor data:
P_2 = 5.5 kW, 4-pole, eff1, star-delta starting for a supply voltage of 400 V/50 Hz

Order number:
1LA9130-4KA90-Z G55+L1U

Further information under:
http://www.siemens.com/ecofast

1) Not available for EX-motors.

MICROSTARTER

The new MICROSTARTER is a module for distributed drive technology. It can be used as a direct-on-line starter or reversing starter up to a motor output of 4 kW (motor frame size 63 M to 112 M).
A stable die-cast aluminum enclosure with IP65 degree of protection is fitted instead of the motor terminal box. In addition to the control and evaluation electronics, it includes a direct-on-line or reversing contactor (depending on the version).

The MICROSTARTER is always equipped with a PTC thermistor detector (Order Code **A11**) and the corresponding electronic evaluation system. If the motor overheats, MICROSTARTER will automatically trip. This obviates the need for an external tripping unit for PTC thermistors.

If used as a standard slave on the AS-Interface, the MICROSTARTER has 4 inputs and 4 outputs. Two digital inputs with M12 sockets are available for receiving and evaluating signals close to the motor. An alternative to connecting the MICROSTARTER to the AS-Interface is to control it with an external DC 24 voltage.
The power supply is connected with a HAN Q8 plug-in connector in accordance with DESINA. In this way, the MICROSTARTER can be integrated into the ECOFAST system. The MICROSTARTER can also be ordered with a metric cable entry port, if required.

Due to its high degree of protection and compact design, the MICROSTARTER is especially suitable for use in conveying and handling systems.

Example: 1LA7 motor with MICROSTARTER

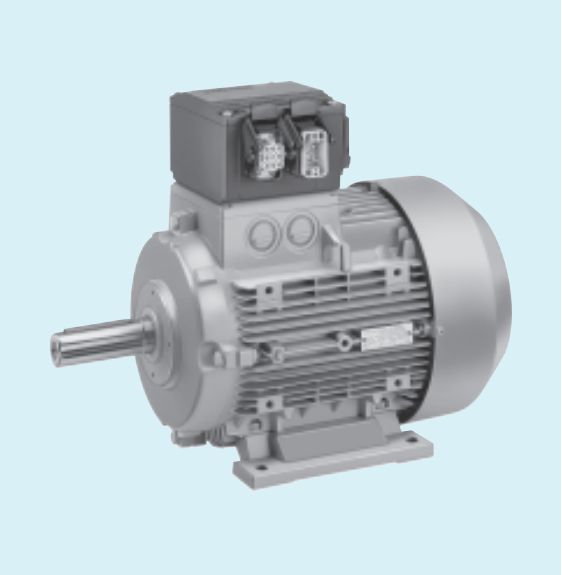

Technical data

Rated output	up to 4 kW, frame sizes 63 M to 112 M
Degree of protection	IP65
Mounting position	any
Max. ambient temperature • during operation • during storage and transport	 –20 °C to +40 °C –20 °C to +70 °C
Shock resistance	5 g/10 ms
Vibratory load	3 g
No-load switchover frequency	100 switchovers/h
Rated voltage	3 AC 50 HZ 380 V to 420 V ± 5% 3 AC 60 Hz 440 V to 480 V ± 5%
Overload protection	Motor thermistor analysis
Short-circuit protection for a power supply with • ECOFAST plug-in connector • metric cable entry port	 Short-circuit protection with max. 40 A circuit-breaker max. 25 A gL/gG (group fusing)
Power supply connection	ECOFAST (HAN Q8) or metric cable entry port (M25)
LED display (with AS-Interface connection)	AS-Interface, AUX. Power, STATE, Sensor1, Sensor2
Connection of external sensors (with AS-Interface connection)	2 via M 12 sockets
Minimum/maximum cross-sections of connections at contactor (for metric cable entries) Direct-on-line starter: • finely stranded with end sleeve • single-wire without end sleeve Reversing starter: • finely stranded with end sleeve • single-wire without end sleeve	 2 x (0.75 to 1.5) mm^2 or 1 x (0.75 to 2.5) mm^2 2 x (1 to 2.5) mm^2 or 1 x 4 mm^2 2 x (0.75 to 1.5) mm^2 2 x (1 to 1.5) mm^2
AS-Interface • Motor starter profile • Addressing • Connection for yellow and black trapezoidal-section cable • Total current input	 7D via address jack with addressing unit via adapter plate with insulation piercing method ≤ 250 mA

Types

	Power supply connection	Dimensions (with view onto drive end) H x W x D mm	Weight kg	Order code
Direct-on-line starter with DC 24 V control	M25	92 x 151 x 131	1.25	**H90**
	HAN Q8	92 x 167 x 131	1.30	**H91**
Direct-on-line starter with AS-I connection	M25	92 x 151 x 154	1.35	**H92**
	HAN Q8	92 x 167 x 154	1.40	**H93**
Reversing starter with AS-I connection	M25	92 x 151 x 154	1.50	**H94**
	HAN Q8	92 x 167 x 154	1.55	**H95**

The MICROSTARTER is fitted to three-phase AC motors with frame sizes 63 M to 112 M. The power supply connection (M25 or HAN Q8) is located on the right when viewed onto the drive end.

When ordering please also state the corresponding Order Code in addition to the motor order number.

Options which can be combined with the MICROSTARTER (see "Special designs" Section 3):

Voltage code	"Modular technology"	"Mechanical versions"
1	H57 (from size 100)	D30, D31, D40
	H58 (from size 100)	K01, K16, K17
	G17 (from size 100)	K20 (from size 100)
	H61 (from size 100)	K30, K31
		K40 (from size 100)
		K94
		L04, L13, L99
		Y82

In addition, all "Types of construction", "Paint finishes", "Other mountings" and "Safety and commissioning notes/ certificates" can be combined.

2

Modular technology

The range of potential applications for the 1LA and 1LG motors can be broadened considerably in combination with the following built-on accessories (e.g. the motors can be used as brake motors).

- Rotary pulse encoder 1XP8 001, frame sizes 100 L to 315 L
- Separately driven fan, frame sizes 100 L to 315 L
- Brake, frame sizes 63 to 315L

The brake must always be mounted in the factory for safety reasons. The rotary pulse encoder and/or the separately driven fan can also be retrofitted.

The degree of protection for motors with built-on accessories is IP55. Higher degrees of protection on request.

Rotary pulse encoder 1XP8 001

The rotary pulse encoder can be supplied already mounted in an HTL version as 1XP8 001-1 (Order Code **H57**) or in a TTL version as 1XP8 001-2 (Order Code **H58**).

It can also be ordered and fitted separately (Order No. **1XP8 001-1** or **1XP8 001-2**, part 8). All 1LA5, 1LA6, and 1LA7 motors with frame sizes 100L to 225M that are listed in the catalogue are prepared for fitting a rotary pulse encoder on the non-drive end (with M8 centre hole, form DR). All 1LG4 and 1LG6 motors that are listed in the catalogue have a M16 centre hole, form DS, on the non-drive end. The rotary pulse encoder can be fitted using a M16 adapter for M8. The rotary pulse encoder can only be fitted on a standard non-drive end, i.e. a second shaft extension or a canopy can no longer be supplied.

Rotary pulse encoder 1XP8 001

Fixing dimensions for rotary pulse encoder 1XP8 001

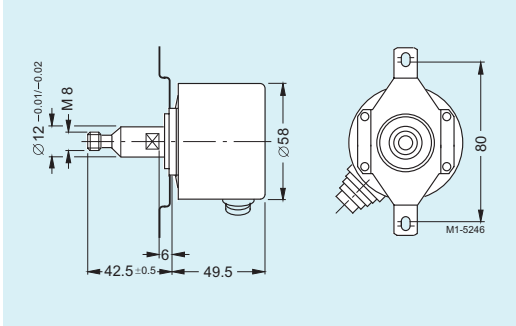

Technical data of rotary pulse encoders

Supply voltage U_B	**1XP8 001-1** (HTL version) +10 V to +30 V	**1XP8 001-2** (TTL version) 5 V ±10%
Current input without load	200 mA	150 mA
Maximum load current per output	max. 100 mA	max. 20 mA
Pulses per revolution	1024	1024
Outputs	2 square-wave pulses A, B - 2 inverted square-wave pulses A, B Zero pulse and inverted zero pulse	
Pulse offset between the two outputs	90° ± 20%	90° ± 20%
Output amplitude	$U_{High} > U_B - 3.5$ V $U_{Low} < 3$ V	$U_{High} > 2.5$ V $U_{Low} < 0.5$ V
Minimum edge interval	0.8 µs at 160 kHz	0.45 µs at 300 kHz
Edge steepness (without load or cable)	t_+, $t_- \leq 200$ ns	t_+, $t_- \leq 100$ ns
Maximum frequency	160 kHz	300 kHz
Maximum speed	9000 rpm	12000 rpm
Temperature range	–20 °C to +80 °C	–20 °C to +100 °C
Degree of protection	IP66	IP66
Maximum radial cantilever force	60 N	60 N
Maximum axial force	40 N	40 N
Termination system	12-way plug (socket supplied)	
Certificates	CSA, UL	CSA, UL
Weight	0.3 kg	0.3 kg

Separately driven fan

The use of a separately driven fan is recommended to increase motor utilization at low speeds and to limit noise generation at speeds significantly higher than the synchronous speed. In both cases, this refers to converter-fed operation only. Please enquire about traction and vibratory operation.

The separately driven fan can be supplied already fitted. Order Code **G17**.

It can also be ordered and fitted separately (see Accessories, part 8, for selection information and order numbers).

The separately driven fan has a rating plate with all important data. Please note the fan's direction of rotation (axial fan) when connecting it. Coolant temperature $CT_{max.}$ 50 °C, higher coolant temperatures on request.

Technical data of the separately driven fan

Size	Rated voltage range	Frequency	Rated speed	Rated output	Rated current
	V	Hz	rpm	kW	A
100 L	200 to 290 Δ	50	2680	0.062	0.24
	346 to 500 Y	50	2680	0.062	0.14
	200 to 290 Δ	60	3000	0.052	0.16
	346 to 500 Y	60	3000	0.052	0.09
112 M	200 to 290 Δ	50	2760	0.097	0.43
	346 to 500 Y	50	2760	0.097	0.25
	200 to 290 Δ	60	3120	0.098	0.29
	346 to 500 Y	60	3120	0.098	0.17
132 S/M	200 to 290 Δ	50	2690	0.164	0.59
	346 to 500 Y	50	2690	0.164	0.34
	200 to 290 Δ	60	2960	0.212	0.52
	346 to 500 Y	60	2960	0.212	0.30
160 M to 225 M [1])	200 to 290 Δ	50	2690	0.269	0.95
	346 to 500 Y	50	2690	0.269	0.55
	200 to 290 Δ	60	2980	0.354	0.84
	346 to 500 Y	60	2980	0.354	0.48
250 M to 280 M	220 to 240 Δ	50	2720	0.450	2.00
	380 to 420 Y	50	2720	0.450	1.15
	440 to 480 Y	60	3320	0.520	1.05
315-2-pole	220 to 240 Δ	50	2750	0.650	2.85
	380 to 420 Y	50	2750	0.650	1.64
	440 to 480 Y	60	3365	0.750	1.60
315-4- . . . 8-pole	220 to 240 Δ	50	2720	0.450	2.00
	380 to 420 Y	50	2720	0.450	1.15
	440 to 480 Y	60	3320	0.520	1.05

Mounting of separately driven fan for 1LA5, 1LA6, 1LA7 and 1LG motors

Design	Size	Number of poles	Order No.
Separately driven fan incl. mounting parts [2])	100	all	**2CW2 185-8RF14-1AA0**
	112	all	**2CW2 210-8RF14-1AA1**
	132	all	**2CW2 250-8RF14-1AA2**
	160	all	**2CW2 300-8RF14-1AA3**
	180	all	**2CW2 300-8RF14-1AA4**
	200	all	**2CW2 300-8RF14-1AA5**
	225 [3])	all	**2CW2 300-8RF14-1AA6**
	250	all	**1PP9 063-2LA12-Z A11+K50**
	280	all	**1PP9 063-2LA12-Z A11+K50**
	315	2	**1PP9 070-2LA12-Z A11+K50**
	315	4 to 8	**1PP9 063-2LA12-Z A11+K50**
Separately driven fan and rotary pulse encoder incl. mounting parts [2])	100	all	**2CW2 185-8RF14-2AA0**
	112	all	**2CW2 210-8RF14-2AA1**
	132	all	**2CW2 250-8RF14-2AA2**
	160	all	**2CW2 300-8RF14-2AA3**
	180	all	**2CW2 300-8RF14-2AA4**
	200	all	**2CW2 300-8RF14-2AA5**
	225 [3])	all	**2CW2 300-8RF14-2AA6**

1) For 1LG4 and 1LG6 motors with frame size 225 the values for frame sizes 250 M to 280 M apply.

2) The separately driven fan 2CW2 . . . includes a fan unit with fan impeller, the separately driven fan 1PP9 . . . only includes the fan motor.

3) For 1LG motors with separately driven fan with Order No. 1PP9063-2LA12-Z A11+K50

Brakes

Spring-operated disk brakes are used. Depending on the motor selected, brake types 2LM8 or KFB are used. Standard brakes are for connection to 230 V and delivered with a rectifier.

Order Code **G26**.

2LM8 spring-operated disk brake

This brake is fitted to 1LA5 and 1LA7 motors with frame sizes 63 to 225 and to 1LG motors with frame sizes 180 to 200 as standard.

Design and mode of operation
The brake takes the form of a single-disk brake with two friction faces.

The braking torque is generated by friction when pressure is applied by one or more compression springs to the de-energized brake. The brake is released electromagnetically.

When the motor brakes, the rotor - which can be axially shifted on the hub or the shaft - is pressed via the armature disk against the opping frictional surfaces by means of the springs. When the brake is applied, there is an air gap $S_{LÜ}$ between the armature disk and the solenoid component. The solenoid coil is energized with DC voltage in order to release the brake. The resulting magnetic force pulls the armature disk towards the solenoid component against the spring force. The spring force is then no longer applied to the rotor, so that the latter is able to rotate freely.

Voltage and frequency
The solenoid coils and the rectifier of the brakes are designed for connection to the following voltages:
1 AC 50 Hz 230 V ± 10% or
1 AC 60 Hz 230 V ± 10%.

It is not permissible to increase the brake voltage at 60 Hz!

The brake can also be supplied for other voltages. Brake connection voltage:
24 V DC Order Code **C00**
2x 400 V AC Order Code **C01**
Order Codes **C00** and **C01** must only be used in conjunction with Order Code **G26**.

Rating plate
The motors have a second rating plate with the brake data on the opposite side of the motor.

The 2LM8 brake is designed in IP55 degree of protection.

Please enquire if the brake motors are used at subzero temperatures or in very humid environments (e.g. in a maritime climate) with long downtimes.

Connection
The main terminal box of the motor contains labeled terminals for connecting the brake.

The AC voltage for the excitation winding of the brake is connected to the two free terminals of the rectifier block (~).

The brake can be released when the motor is stationary by separately energizing the solenoid. In this case, AC voltage must be connected to the terminals of the rectifier block. The brake remains released as long as this voltage is present.

The rectifiers are protected against overvoltages by means of varistors at the input and output.

The terminals of the brakes for 24 V DC voltage are connected to the DC voltage source directly.

Fast brake application
The brake is applied when it is isolated from the supply. The application time of the brake disk is delayed by the solenoid coil inductance (disconnected on the AC side). This involves a significant delay. For short brake application times, the brake must be disconnected on the DC side. For this purpose, the jumper between contact 1+ and contact 2+ must be removed and replaced by the contacts of an external switch (see circuit diagrams).

Mechanical manual release
The brakes can be supplied with a mechanical manual release using an actuator lever.
Order Code **K82**.
The length of the motor is increased by Δ L due to mounting the brake. For dimensions see Page 2/56.

Design of the brake

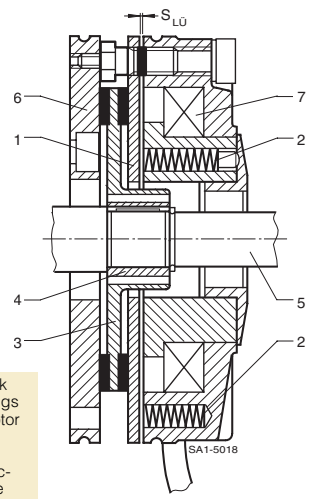

1 Armature disk
2 Compr. springs
3 Ax. sliding rotor
4 Hub
5 Shaft
6 Opposing frictional surface
7 Solenoid comp.

Half-wave rectifier 400 V AC

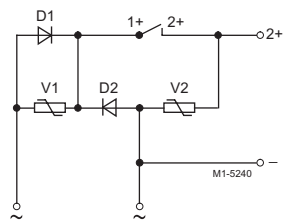

Rectifier bridge 230 V AC

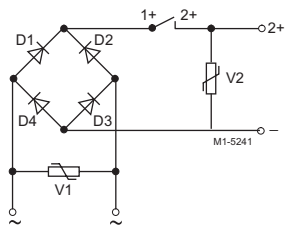

Brake connection with 24 V DC voltage

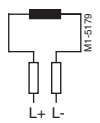

Brakes (continued)

Performance of spring-operated brakes with standard excitation													Brake rating	
For motors Frame size	Brake type	Rated brake torque at 100 rpm	Rated brake torque in relation to rated brake torque at 100 rpm in % for the following speeds			Voltage	Current/ Power input [1])		Brake application time t_2 [2])	Brake release time	Brake moment of inertia	Noise level L_p with rated air gap	Lifetime of brake lining L	Air gap adjustment required after braking energy L_N
			1500 rpm	3000 rpm	max. speed									
		Nm	%	%	%	V	A	W	ms	ms	kg m^2	dB(A)	Nm · 10^6	Nm · 10^6
63	**2LM8 005-1NA10** **2LM8 005-1NA60** **2LM8 005-1NA80**	5	87	80	65	AC 230 AC 400 DC 24	0.1 0.11 0.83	20	25	56	0.000013	77	105	16
71	**2LM8 005-2NA10** **2LM8 005-2NA60** **2LM8 005-2NA80**	5	87	80	65	AC 230 AC 400 DC 24	0.1 0.11 0.83	20	25	56	0.000013	77	105	16
80	**2LM8 010-3NA10** **2LM8 010-3NA60** **2LM8 010-3NA80**	10	85	78	65	AC 230 AC 400 DC 24	0.12 0.14 1.04	25	26	70	0.000045	75	270	29
90	**2LM8 020-4NA10** **2LM8 020-4NA60** **2LM8 020-4NA80**	20	83	76	66	AC 230 AC 400 DC 24	0.15 0.17 1.25	32	37	90	0.00016	75	740	79
100	**2LM8 040-5NA10** **2LM8 040-5NA60** **2LM8 040-5NA80**	40	81	74	66	AC 230 AC 400 DC 24	0.2 0.22 1.67	40	43	140	0.00036	80	1350	115
112	**2LM8 060-6NA10** **2LM8 060-6NA60** **2LM8 060-6NA80**	60	80	73	65	AC 230 AC 400 DC 24	0.25 0.28 2.1	53	60	210	0.00063	77	1600	215
132	**2LM8 100-7NA10** **2LM8 100-7NA60** **2LM8 100-7NA80**	100	79	72	65	AC 230 AC 400 DC 24	0.27 0.31 2.3	55	50	270	0.0015	77	2450	325
160	**2LM8 260-8NA10** **2LM8 260-8NA60** **2LM8 260-8NA80**	260	75	68	65	AC 230 AC 400 DC 24	0.5 0.47 4.2	100	165	340	0.0073	79	7300	935
180	**2LM8 315-0NA10** **2LM8 315-0NA60** **2LM8 315-0NA80**	315	75	68	65	AC 230 AC 400 DC 24	0.5 0.56 4.2	100	152	410	0.0073	79	5500	470
200, 225	**2LM8 400-0NA10** **2LM8 400-0NA60** **2LM8 400-0NA80**	400	73	68	65	AC 230 AC 400 DC 24	0.55 0.61 4.6	110	230	390	0.0200	93	9450	1260

1) For 400 V AC voltage and for 24 V DC, there may be an output deviation of +10% depending on the selected supply voltage.

2) The specified switching times are valid for switching on the DC side with a rated release travel and with the coil already warm. They are average values which may vary among other things according to the rectifier type and the release travel.

The brake application time for switching on the AC side, for example, is approx. 6 times longer than for switching on the DC side.

Brakes (continued)

Lifetime of the braking lining
The braking energy L_N until the brake needs to be adjusted depends on various factors, and particularly on the masses that are braked, the operating speed, the operating frequency and thus the temperature on the friction faces. It is therefore not possible to specify a value for the friction energy until readjustment that is valid for all operating conditions.

The specific wear on the friction faces (volume of wear per unit of friction energy) is approximately 0.05 to 2 cm^3/kWh when the brake is used as a service brake.

Maximum speeds
Please refer to the table below for the maximum speeds at which an emergency stop is permissible. These speeds should be considered as recommended values and confirmed by testing under actual operating conditions.

The maximum permitted braking energy depends on the operating frequency and is shown for the various brakes on the graph opposite ("Permissible switching energy as a function of operating frequency"). Greater wear occurs during emergency braking.

Permissible switching energy as a function of operating frequency

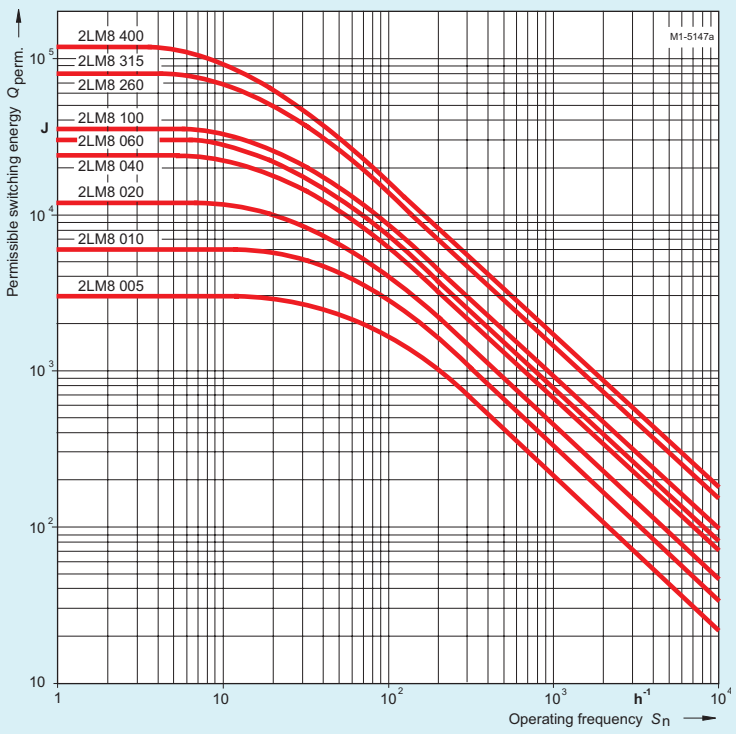

For motors Frame size	Brake type	Max. rpm: Max. operating rpm if max. switching energy utilized	Max. rpm: Max. no-load rpm with emergency stop function: Horizontal mounting	Max. rpm: Max. no-load rpm with emergency stop function: Vertical mounting	Change in braking torque: Reduction per notch	Change in braking torque: Dim. "O_1"	Change in braking torque: Min. braking torque	Readjustment of air gap: Rated air gap $S_{LüNenn}$	Readjustment of air gap: Max. air gap $S_{Lümax.}$	Readjustment of air gap: Min. rotor thickness $h_{min.}$
		rpm	rpm	rpm	Nm	mm	Nm	mm	mm	mm
63	**2LM8 005-1NA . .**	3000	6000	6000	0.17	7.0	3.7	0.2	0.4	4.5
71	**2LM8 005-2NA . .**	3000	6000	6000	0.17	7.0	3.7	0.2	0.4	4.5
80	**2LM8 010-3NA . .**	3000	6000	6000	0.35	8.0	7.0	0.2	0.45	5.5
90	**2LM8 020-4NA . .**	3000	6000	6000	0.76	7.5	18.2	0.2	0.55	7.5
100	**2LM8 040-5NA . .**	3000	6000	6000	1.29	12.5	21.3	0.3	0.65	8.0
112	**2LM8 060-6NA . .**	3000	6000	6000	1.66	11.0	32.8	0.3	0.75	7.5
132	**2LM8 100-7NA . .**	3000	5300	5000	1.55	13.0	61.1	0.3	0.75	8.0
160	**2LM8 260-8NA . .**	1500	4400	3200	5.6	17.0	157.5	0.4	1.2	12.0
180	**2LM8 315-0NA . .**	1500	4400	3200	5.6	17.0	178.4	0.4	1.0	12.0
200, 225	**2LM8 400-0NA . .**	1500	3000	3000	6.15	21.0	248.7	0.5	1.5	15.5

Brakes (continued)

Changing the braking torque
The brake is supplied with a preset torque. For 2LM8 brakes, it is possible to reduce this torque to the dimension o_1 by unscrewing the adjusting ring with a hook spanner.
The braking torque changes by the values shown in the above table for each notch of the adjusting ring.

Readjusting the air gap
Under normal operating conditions, the brake is practically maintenance-free. The air gap $s_{Lü}$ must be checked at regular intervals if the application requires a very large amount of friction energy, and readjusted to the rated gap $s_{LüNenn}$ at the latest when the maximum air gap $s_{Lümax}$ is reached.

Readjustment of air gap

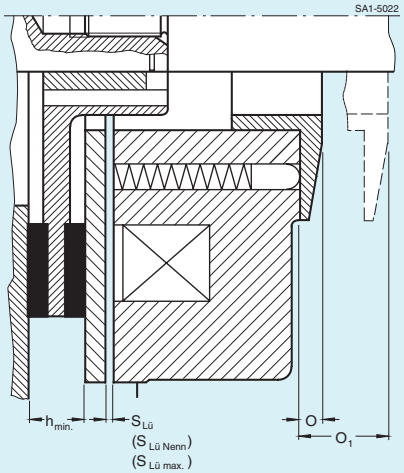

KFB spring-operated brake
The KFB solenoid double-disk spring-operated brake is a safety brake which brakes the motor if the supply power is disconnected (power failure, emergency stop).
This brake is the standard brake for 1LG motors with frame sizes 225 to 315.
KFB brakes can be supplied with frame sizes 180 and 200 instead of 2LM8 standard brakes, if required. Special brake selections on request.

The KFB brake, IP65 degree of protection, is mainly used for electric motors for moving devices, lifting gear, and cranes as well as for special industrial applications.

Design and mode of operation
When the brake current is switched on, an electromagnetic field develops which overcomes the spring force of the brake. The corresponding modules, including the motor shaft, can rotate freely. The brake is released. If the brake current is switched off or if there is a power failure, the electromagnetic field of the brake disappears. The mechanical braking energy is transferred to the motor shaft. The motor is braked.

Voltage and frequency
The standard design is for connection to 230 V/50 Hz ±10%.

It is not permissible to increase the brake voltage at 60 Hz!

KFB brake

Brakes (continued)

The brake can also be supplied for other voltages.
Brake connection voltage:
24 V DC Order Code **C00**
2x 400 V AC Order Code **C01**
Order Codes **C00** and **C01** must only be used in conjunction with Order Code **G26**.

Rating plate
The motors have a second rating plate with the brake data on the opposite side of the motor.

Connection
The motors are fitted with an additional terminal box next to the main terminal box which is used for the brake connection.

KFB brakes are equipped with a standard rectifier bridge or half-way rectifier. Special connections are not required. Optimal operating times are achieved without special circuitry.

Mechanical manual release
The brakes can be released manually with screws as standard. The brakes can be supplied with a mechanical manual release using an actuator lever. Order Code **K82**.

Other characteristics of the KFB brake

- High IP65 degree of protection.
- Corrosion-resistant in seawater and in the tropics.
- This brake is a dynamic brake, not simply a holding brake. For this reason, there is less wear, especially in the case of emergency stops (commissioning).
- High wear reserves; repeated stepless air gap readjustment possible. This results in very long downtimes and low service and operating costs.
- The function and wear can be monitored with a microswitch and proximity switch. Microswitch on/off is standard for LG motors. Optionally an anti-condensation heating.
- Fully functional brake for enclosure acceptance test. Visual inspection of brake possible during operation.
- The brake (air gap) can be adjusted in the workshop, for example, and mounted to the motor without further adjustments.
- The working parts can be replaced without great outlay. After the housing has been opened (three screws), it is easy to replace the friction lining carrier. It is not necessary to disassemble the entire brake.

Design of the KFB brake

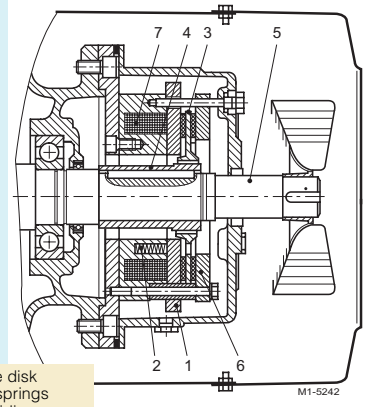

1 Armature disk
2 Compr. springs
3 Axially sliding friction lining carrier
4 Hub
5 Shaft
6 Opp. frict.surface
7 Solenoid coil

Half-wave rectifier 400 V AC

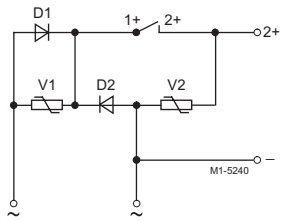

Rectifier bridge 230 V AC

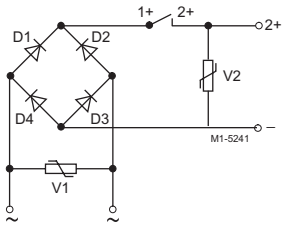

Brake connection with 24 V DC voltage

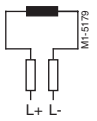

Brakes (continued)

Overview of brake selections for 1LG motors		For motor Size					
		180 [1])	200 [1])	225 [2])	250 [2])	280 [2])	315 [2])
Number of poles		2 to 8	2 to 8	2 to 8	2 to 8	4 to 8	4 to 8
Non-drive end bearing		6310C3	6312C3	6313C3	6215C3	6317C3	6319C3
Flange bearing plate for non-drive end brake mounting		A300	A350	A350	A400	A450	A550
Max. diameter for second drive shaft		48k6	55m6	55m6	48m6 [3])	65m6	70m6
Brake type		**KFB 25**	**KFB 40**	**KFB 40**	**KFB 63**	**KFB 100**	**KFB 160**
Braking torque	Nm	250	400	400	630	1000	1600
n_{max} – IMB3	rpm	6000	5500	5500	4700	4000	3600
n_{max} – IMV1	rpm	6000	5500	5500	4700	4000	3600
Output at 110 V DC	W	158	196	196	220	307	344
Current at 230 V AC (207 V coil voltage)	A	0.77	0.91	0.91	1	1.53	1.64
Current at 400 V AC (180 V coil voltage)	A	0.8	1.18	1.18	1.25	1.8	2.1
Current at 110 V DC	A	1.44	1.78	1.78	2	2.79	3.13
Current at 24 V DC	A	5.21	6.92	9.62	8.17	12.2	12.8
Application time t_2	ms	70	80	80	110	125	180
Release time	ms	240	250	250	340	370	500
Brake moment of inertia	kg m^2	0.0048	0.0068	0.0068	0.0175	0.036	0.050
Lifetime of brake lining L	Nm · 10^6	3600	3110	3110	4615	7375	10945
Air gap must be readjusted after braking energy L_N	Nm · 10^6	810	935	935	1185	2330	3485

Configuration of brake motors

Braking time

The time it takes the motor to come to a standstill comprises two components:

a) The application time of the brake t_2

b) The braking time t_{Br}

$$t_{Br} = \frac{J \cdot n_N}{9.55 \cdot (M_B \pm M_L)}$$

t_{Br} Braking time in s

J Total moment of inertia in m^2

n_N Rated speed value of brake motor in rpm

M_B Rated braking torque in Nm

M_L Average load moment in Nm (supports M_L braking, so M_L is positive)

Overtravel rotations U

The overtravel rotations U of the brake motor can thus be calculated as follows:

$$U = \frac{n_N}{60}\left(t_2 + \frac{t_{Br}}{2}\right)$$

t_2 Application time of the brake in ms

Braking energy per braking operation Q_{zul}

The braking energy per braking operation in Nm consists of the energy of the moments of inertia to be braked Q_{Kin} and the energy Q_L which is required to brake a load moment:

$$Q_{zul} = Q_{Kin} + Q_L$$

a) The energy of the moments of inertia in Nm

$$Q_{kin} = \frac{J \cdot n_N^2}{182.4}$$

n_N Rated speed value before braking in rpm

J Total moment of inertia in kg m^2

b) The braking energy in Nm against a load moment:

$$Q_L = \frac{\pm M_L \cdot n_N \cdot t_{Br}}{19.1}$$

M_L average load moment in Nm

M_L is positive if it is directed against braking

M_L is negative if it supports braking

Lifetime of the brake lining L and readjustment of the air gap

The brake lining becomes worn through friction which increases the air gap and the time it takes to brake at standard excitation.

If the brake lining is worn out, it can be replaced easily.

In order to calculate the lifetime of the brake lining for circuit S_{max}, it is necessary to divide the lifetime of the brake lining L in Nm by the braking energy Q_{zul}:

$$S_{max} = \frac{L}{Q_{zul}}$$

The readjustment interval N for circuits can be calculated by dividing the braking energy L_N, which the brake must expend until the air gap needs readjusting with Q_{zul}.

$$N = \frac{L_N}{Q_{zul}}$$

1) The standard brake for frame sizes 180 and 200 is brake 2LM8. KFB brake on request.

2) The standard brake for frame sizes 225 to 315 is the KFB brake.

3) Special shaft without screw-in fan adapter.

Dimensions and weight

Fixing dimensions 1LA5, 1LA6, 1LA7, 1LG4, and 1LG6

Brake, Order Code G26

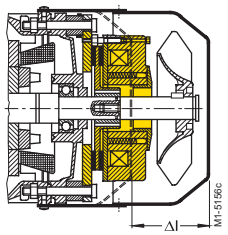

Rotary pulse encoder, Order Codes H57, H58, H70, H72, H73

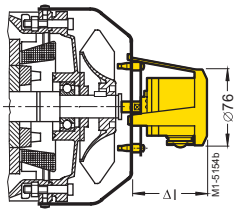

Separately driven fan, Order Code G17

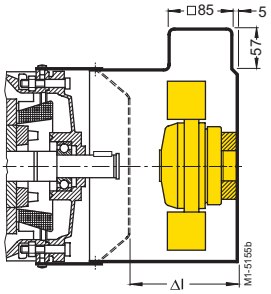

Brake and rotary pulse encoder, Order Codes H62, H98

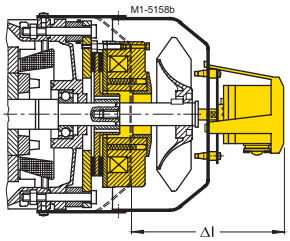

Brake and separately driven fan, Order Code H63

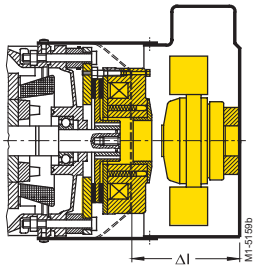

Rotary pulse encoder and separately driven fan, Order Codes H61, H97

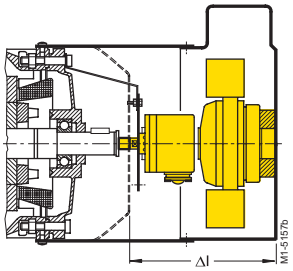

Brake, rotary pulse encoder and separately driven fan, Order Codes H64, H99

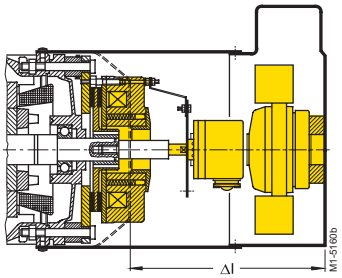

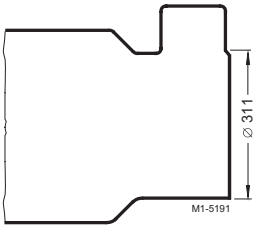

The fan attachment becomes narrower on the non-drive end of the motor housing with frame sizes 180 and 225 (with separately driven fan).

Dimensions and weights (continued)

For motor Size	Rotary pulse encoder 1XP8 (H57, H58)	HOG9 (H72, H74)	HOG10 (H73, H75)	LL 861 (H70, H71)	Separately driven fan (G17)	Brake and separately driven fan (H63)	Extra weight for separately driven fan (G17)	Extra weight for brake and separately driven fan (H63)	Rotary pulse encoder and separately driven fan (H61, H97)	Brake, separately driven fan, and rotary pulse encoder (H64, H99)	Brake (G26)	Extra weight for brake (G26)	Brake and rotary pulse encoder (H62, H98)	Diameter of the cover
	Δl [mm]	Δl [mm]	Δl [mm]	Δl [mm]	Δl [mm]	Δl [mm]	approx. kg	approx. kg	Δl [mm]	Δl [mm]	Δl [mm]	approx. kg	Δl [mm]	mm
1LA6[1]), 1LA5, 1LA7														
63											51	1	–	–
71											51	1	–	–
80											54	2	–	–
90											75	4	–	–
100	78	89	134	91	124	124	4.0	10	209	209	78	6	156	202
112	78	89	134	91	137	137	4.5	12.5	212	212	87	8	165	227
132	78	89	134	91	155	155	5.5	17.5	225	225	106	12	184	226
160	78	89	134	91	200	200	7.0	33	250	250	129	26	207	320
180	78	89	134	91	242	242	10.0	37	242	242	137	27	215	358 (311)
200	78	89	134	91	245	245	11.0	52	245	245	142	41	220	398 (311)
225	78	89	134	91	245	245	11.0	52	245	245	142	41	220	398 (311)
1LG4, 1LG6														
180	63	72	116	86	233	233	10	32	233	233	125	22	203	356
200	63	72	116	86	237	237	11	43	237	237	137	32	215	396
225	63	72	116	86	235	576	22	85	425	519	239	63	317	439
250	63	72	116	86	235	578	25	108	425	505	225	83	303	489
280	63	72	116	86	235	550	28	146	425	507	227	118	305	539
315	63	72	116	86	247	577	36	291	437	545	265	255	343	604
1LA8														
315		89	133	101										
355		89	133	101										
400		89	133	101										
450		89	133	101										

1) No brake and HOG10 can be mounted to 1LA6.

2

Further mountings for 1LA/1LG motors

The "Further mountings" range includes rotary pulse encoders for frame sizes 100L to 450 for motors 1LA5, 1LA6, 1LA7, 1LA8, and 1LG4/6. Please enquire about rotary pulse encoders for 1LA9 motors.

For 1LA motors, the Order Codes from the "Further mountings" range cannot be combined with Order Codes from the modular technology range.

For 1LG motors, the Order Codes **G17** (mounting of separately driven fan), **G26** (mounting of brake), and **H63** (mounting of brake and separately driven fan) from the modular technology range can be combined with the rotary pulse encoders from the "Further mountings" range.

Rotary pulse encoder LL 861 900220

This encoder is very robust and therefore suitable for service in harsh environments. It is shock-free and vibration-proof and is fitted with insulated bearings.

- The LL 861 900 220 rotary pulse encoders can be supplied already fitted. Order Code **H70**.
- The LL 861 900 220 rotary pulse encoders can be provided by the customer and installed by Siemens. Order Code **H71**.
- The LL 861 900 220 rotary pulse encoders can also be fitted separately. The motor must be prepared for this purpose. Order Code **H78** must be specified when ordering. The rotary pulse encoder is not part of the scope of supply. Parts required for assembly are also supplied.

The rotary pulse encoders with diagnostic system (ADS) can be supplied by Leine und Linde.

Manufacturer:
Leine und Linde (Germany) GmbH
73430 Aalen
Spitalstr. 19
http://www.leinelinde.de

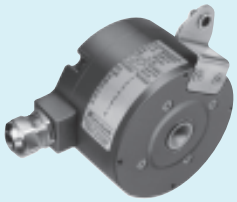

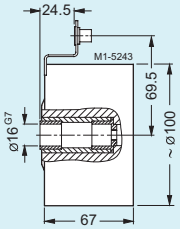

Technical data LL 861 900 220 (HTL version)

Supply voltage U_B	+9 V to +30 V
Current input without load	max. 80 mA
Maximum load current per output	40 mA
Pulses per revolution	1024
Outputs	6 short-circuit proof square wave pulses A, A', B, B', 0, 0'
Pulse offset between the two outputs	90° ± 25° el.
Output amplitude	U_{High} > 20 V U_{Low} < 2.5 V
Pulse duty factor	1 : 1 ± 10%
Edge steepness	50 V/µs (without load)
Maximum frequency	100 kHz with 350 m cable
Maximum speed	4000 rpm
Temperature range	–20 °C to +80 °C
Degree of protection	IP65
Maximum radial cantilever force	300 N
Maximum axial force	100 N
Termination system	Terminals in encoder Radial cable connection M20 x 1.5
Weight	approx. 1.3 kg

Rotary pulse encoder HOG9 D 1024 I

The encoder is fitted with insulated bearings.

- The HOG9 D 1024 I rotary pulse encoder can be supplied already fitted. Order Code **H72**.
- The HOG9 D 1024 I rotary pulse encoder can be provided by the customer and installed by Siemens. Order Code **H74**.

The HOG9 D 1024 I rotary pulse encoder can be fitted separately. The motor must be prepared for this purpose. Order Code **H79** must be specified in the order. The rotary pulse encoder is not part of the scope of supply. Parts required for assembly are also supplied.

Manufacturer:
Hübner Elektromaschinen AG
10967 Berlin
Planufer 92b
http://www.huebner-berlin.de

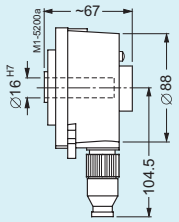

Technical data HOG9 D 1024 I (HTL version)	
Supply voltage U_B	+9 V to +30 V
Current input without load	50 to 100 mA
Maximum load current per output	60 mA, 300 mA (max.)
Pulses per revolution	1024
Outputs	4 short-circuit proof square wave pulses A, B, and A', B'
Pulse offset between the two outputs	90° ± 20%
Output amplitude	$U_{High} \geq U_B - 3.5$ V $U_{Low} \leq 1.5$ V
Pulse duty factor	1 : 1 ± 20%
Edge steepness	10 V/µs
Maximum frequency	120 kHz
Maximum speed	7000 rpm
Temperature range	–20 °C to +100 °C
Degree of protection	IP56
Maximum radial cantilever force	150 N
Maximum axial force	100 N
Termination system	Radial right-angle plug (socket is part of the scope of supply)
Mech. design acc. to Hübner Ident. No.	73 522 B
Weight	Approx. 0.9 kg

Rotary pulse encoder HOG10 D 1024 I

This encoder is very robust and therefore suitable for service in harsh environments. It is fitted with insulated bearings.

- The HOG10 D 1024 rotary pulse encoder can be supplied already fitted. Order Code **H73**.
- The HOG10 D 1024 rotary pulse encoder can be provided by the customer and installed by Siemens. Order Code **H75**.
- The HOG10 D 1024 rotary pulse encoder can be fitted separately. The motor must be prepared for this purpose. Order Code **H80** must be specified in the order. The rotary pulse encoder is not part of the scope of supply. Parts required for assembly are also supplied.

Manufacturer:
Hübner Elektromaschinen AG
10967 Berlin
Planufer 92b
http://www.huebner-berlin.de

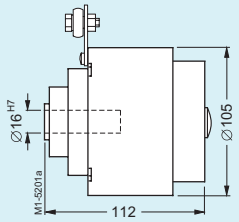

Technical data HOG10 D 1024 I (HTL version)	
Supply voltage U_B	+9 V to +30 V
Current input without load	approx. 100 mA
Maximum load current per output	60 mA, 300 mA (max.)
Pulses per revolution	1024
Outputs	4 short-circuit proof square wave pulses A, B, and A', B'
Pulse offset between the two outputs	90° ± 20%
Output amplitude	$U_{High} \geq U_B - 3.5$ V $U_{Low} \leq 1.5$ V
Pulse duty factor	1 : 1 ± 20%
Edge steepness	10 V/µs
Maximum frequency	120 kHz
Maximum speed	7000 rpm
Temperature range	–20 °C to +100 °C
Degree of protection	IP66
Maximum radial cantilever force	150 N
Maximum axial force	80 N
Termination system	Terminals, cable connection M16 x 1.5
Mech. design acc. to Hübner Ident. No.	74 055 B
Weight	Approx. 1.6 kg

Notes

Squirrel-cage motors 1LA and 1LG selection and ordering data

3

Aluminium housing (0.06 to 53 kW)

Basic version

Energy-saving motor

3/2 • 1LA7, 1LA5 – 2-, 4-pole – 50 Hz, "Improved Efficiency" eff2 acc. to CEMEP

3/3 • 1LA7, 1LA5 – 6-, 8-pole – 50 Hz

3/4 • 1LA9 – 2-, 4-pole – 50 Hz, "High Efficiency" eff1 acc. to CEMEP

3/5 • 1LA9 – 6-pole – 50 Hz

Energy-saving motor acc. to EPACT

3/6 • 1LA9 – 2-, 4-, 6-pole – 60 Hz

With increased power

3/8 • 1LA9 – 2-, 4-pole – 50 Hz

Pole-change motors

3/9 • 1LA7, 1LA5 – 4-/2-, 8-/4-pole – 50 Hz, 2-speed-pole-change

3/10 • 1LA7, 1LA5 – 4-/2-, 6-/4-, 8-/4-pole – 50 Hz, 2-speed-pole-change for fan applications

3/11 • 1LA7, 1LA5 – 8-/6-/4-pole – 50 Hz, 3-speedpole-change for fan applications

Cast iron housing (0.75 to 1000 kW)

Basic version

Energy-saving motor

3/12 • 1LA6, 1LG4, 1LA8 – 2-, 4-pole – 50 Hz, "Improved Efficiency" eff2 acc. to CEMEP

3/14 • 1LA6, 1LG4, 1LA8 – 6-, 8-pole – 50 Hz

3/16 • 1LG6 – 2-, 4-pole – 50 Hz, "High Efficiency" eff1 acc. to CEMEP

3/17 • 1LG6 – 6-, 8-pole – 50 Hz

Energy-saving motor acc. to EPACT

3/18 • 1LG6 – 2-, 4-, 6-pole – 60 Hz

With increased power

3/20 • 1LG4 – 2-, 4-, 6-, 8-pole – 50 Hz

Pole-change motors

3/21 • 1LG4 – 6-/4-, 8-/4-pole – 50 Hz, 2-speed-pole-change for fan applications

For operation with SIMOVERT® MASTERDRIVES

With standard insulation for ≤ 500 V

3/22 • 1LA8 – 2-, 4-, 6-, 8-pole – 50 Hz

With special insulation up to 690 V

3/23 • 1LA7, 1LA5 – 2-, 4-, 6-pole – 50 Hz

3/24 • 1LG6, 1LA8 – 2-, 4-, 6-, 8-pole – 50 Hz

Special designs

3/26 • Windings and motor protection; paint finish

3/27 • Version for hazardous areas, distributed drive systems; marine version

3/28 • Modular assembly; additional modules; converter installation; mechanical design

3/30 • Mechanical design, notes on safety and commissioning certification

1LA5 to 1LA8, 1LG4 and 1LG6 motors

Frame sizes	56 to 450
Output range	0.06 to 1000 kW
Temperature class F	used acc. to class B
Converter compatible	Voltage peak times $t_s > 0.1\ \mu s$ at $U \leq 500$ V

Stock types available for immediate delivery.
For types, see price list M 11.

Energy-saving motors according to CEMEP

Number of poles: 2 and 4
Output range: 1.1 to 90 kW
Eff1 High Efficiency
Eff2 Improved Efficiency
Efficiency determined in accordance with IEC 60 034-2

Motor type identified on rating plate and packaging. $^4/_4$ and $^3/_4$ efficiency levels are documented.
Licensed manufacturers only are permitted to apply identification. Optimization of these motor series has resulted in significant energy savings.

Energy-saving motors according to EPACT

Number of poles: 2, 4 and 6
Output range: 1 to 200 HP
Minimum efficiency levels authorized under US law
Efficiency levels determined according to IEEE 112B

Nominal efficiency level and
NEMA MG-1-12 are stamped on the rating plate.

Squirrel-cage motors
1LA · Aluminium housing · Basic version

Selection and ordering data

Rated output	Size	Order No. / Order No. supplement for voltage and type of construction, see table below	Efficiency class	Operating data at rated output: Rated speed	Efficiency η at 4/4-load	Efficiency η at 3/4-load	Power factor p.f.	Rated current at 400 V	Rated torque	Starting torque (For direct-on-line starting as multiple of the rated torque)	Starting current (multiple of the rated current)	Stalling torque (multiple of the rated torque)	Torque class	Moment of inertia J	Weight approx.
kW			EFF2	rpm	%	%		A	Nm				KL	kg m²	kg
Energy-saving motor to CEMEP "Improved Efficiency" eff2, IP55 degree of protection, temperature class F															
3000 rpm, 2-pole, 50 Hz															
0.09	56 M	**1LA7 050–2AA . .**		2830	63.0	62.0	0.81	0.26	0.30	2.0	3.7	2.3	16	0.00015	3
0.12		**1LA7 053–2AA . .**		2800	65.0	64.0	0.83	0.32	0.41	2.1	3.7	2.4	16	0.00015	3
0.18	63 M	**1LA7 060–2AA . .**		2820	63.0	62.0	0.82	0.50	0.61	2.0	3.7	2.2	16	0.00018	4
0.25		**1LA7 063–2AA . .**		2830	65.0	65.0	0.82	0.68	0.84	2.0	4.0	2.2	16	0.00022	4
0.37	71 M	**1LA7 070–2AA . .**		2740	66.0	65.0	0.82	1.00	1.3	2.3	3.5	2.3	16	0.00029	5
0.55		**1LA7 073–2AA . .**		2800	71.0	70.0	0.82	1.36	1.9	2.5	4.3	2.6	16	0.00041	6
0.75	80 M	**1LA7 080–2AA . .**		2855	73.0	72.0	0.86	1.73	2.5	2.3	5.6	2.4	16	0.00079	9
1.1		**1LA7 083–2AA . .**	**2**	2845	77.0	77.0	0.87	2.40	3.7	2.6	6.1	2.7	16	0.0010	11
1.5	90 S	**1LA7 090–2AA . .**	**2**	2860	79.0	80.0	0.85	3.25	5.0	2.4	5.5	2.7	16	0.0014	13
2.2	90 L	**1LA7 096–2AA . .**	**2**	2880	82.0	82.0	0.85	4.55	7.3	2.8	6.3	3.1	16	0.0018	16
3	100 L	**1LA7 106–2AA . .**	**2**	2890	84.0	84.0	0.85	6.10	9.9	2.8	6.8	3.0	16	0.0035	22
4	112 M	**1LA7 113–2AA . .**	**2**	2905	86.0	86.0	0.86	7.80	13	2.6	7.2	2.9	16	0.0059	29
5.5	132 S	**1LA7 130–2AA . .**	**2**	2925	86.5	86.5	0.89	10.4	18	2.0	5.9	2.8	16	0.015	39
7.5		**1LA7 131–2AA . .**	**2**	2930	88.0	88.0	0.89	13.8	24	2.3	6.9	3.0	16	0.019	48
11	160 M	**1LA7 163–2AA . .**	**2**	2940	89.5	89.5	0.88	20.0	36	2.1	6.5	2.9	16	0.034	68
15	160 M	**1LA7 164–2AA . .**	**2**	2940	90.0	90.2	0.90	26.5	49	2.2	6.6	3.0	16	0.043	77
18.5	160 L	**1LA7 166–2AA . .**	**2**	2940	91.0	91.2	0.91	32.0	60	2.4	7.0	3.1	16	0.051	86
22	180 M	**1LA5 183–2AA . .**	**2**	2940	91.7	91.7	0.88	39.5 [1]	71	2.5	6.9	3.2	16	0.077	113
30	200 L	**1LA5 206–2AA . .**	**2**	2945	92.3	92.3	0.89	53.0	97	2.4	7.2	2.8	16	0.14	159
37		**1LA5 207–2AA . .**	**2**	2945	92.8	92.8	0.89	65.0 [1]	120	2.4	7.7	2.8	16	0.16	179
45	225 M	**1LA5 223–2AA . .**	**2**	2960	93.6	93.6	0.89	78.0 [1]	145	2.8	7.7	3.4	16	0.20	209
1500 rpm, 4-pole, 50 Hz															
0.06	56 M	**1LA7 050–4AB . .**		1350	56.0	55.0	0.77	0.20	0.42	1.9	2.6	1.9	13	0.00027	3
0.09		**1LA7 053–4AB . .**		1350	58.0	57.0	0.77	0.29	0.64	1.9	2.6	1.9	13	0.00027	3
0.12	63 M	**1LA7 060–4AB . .**		1350	55.0	54.0	0.75	0.42	0.85	1.9	2.8	2.0	13	0.00029	4
0.18		**1LA7 063–4AB . .**		1350	60.0	60.0	0.77	0.56	1.3	1.9	3.0	1.9	13	0.00037	4
0.25	71 M	**1LA7 070–4AB . .**		1350	60.0	60.0	0.78	0.77	1.8	1.9	3.0	1.9	13	0.00052	5
0.37		**1LA7 073–4AB . .**		1370	65.0	65.0	0.78	1.06	2.6	1.9	3.3	2.1	13	0.00077	6
0.75	80 M	**1LA7 080–4AA . .**		1395	67.0	67.0	0.82	1.44	3.8	2.2	3.9	2.2	16	0.0014	9
0.55		**1LA7 083–4AA . .**		1395	72.0	72.0	0.81	1.86	5.1	2.3	4.2	2.3	16	0.0017	10
1.1	90 S	**1LA7 090–4AA . .**	**2**	1415	77.0	77.0	0.81	2.55	7.4	2.3	4.6	2.4	16	0.0024	13
1.5	90 L	**1LA7 096–4AA . .**	**2**	1420	79.0	79.0	0.81	3.40	10	2.4	5.3	2.6	16	0.0033	16
2.2	100 L	**1LA7 106–4AA . .**	**2**	1420	82.0	82.5	0.82	4.70	15	2.5	5.6	2.8	16	0.0047	21
3		**1LA7 107–4AA . .**	**2**	1420	83.0	83.5	0.82	6.40	20	2.7	5.6	3.0	16	0.0055	24
4	112 M	**1LA7 113–4AA . .**	**2**	1440	85.0	85.5	0.83	8.20	27	2.7	6.0	3.0	16	0.012	31
5.5	132 S	**1LA7 130–4AA . .**	**2**	1455	86.0	86.0	0.81	11.4	36	2.5	6.3	3.1	16	0.018	41
7.5	132 M	**1LA7 133–4AA . .**	**2**	1455	87.0	87.5	0.82	15.2	49	2.7	6.7	3.2	16	0.023	49
11	160 M	**1LA7 163–4AA . .**	**2**	1460	88.5	89.0	0.84	21.5	72	2.2	6.2	2.7	16	0.043	73
15	160 L	**1LA7 166–4AA . .**	**2**	1460	90.0	90.2	0.84	28.5	98	2.6	6.5	3.0	16	0.055	85
18.5	180 M	**1LA5 183–4AA . .**	**2**	1460	90.5	90.5	0.83	35.5 [1]	121	2.3	7.5	3.0	16	0.13	113
22	180 L	**1LA5 186–4AA . .**	**2**	1460	91.2	91.2	0.84	41.5 [1]	144	2.3	7.5	3.0	16	0.15	123
30	200 L	**1LA5 207–4AA . .**	**2**	1465	91.8	91.8	0.86	55.0	196	2.6	7.0	3.2	16	0.24	157
37	225 S	**1LA5 220–4AA . .**	**2**	1470	92.9	92.9	0.87	66.0 [1]	240	2.8	7.0	3.2	16	0.32	206
45	225 M	**1LA5 223–4AA . .**	**2**	1470	93.4	93.4	0.87	80.0 [1]	292	2.8	7.7	3.3	16	0.36	232

Higher outputs under "1LA/1LG · Cast iron housing" on Pages 3/12 and 3/13.

Order No. supplements

Motor type	Penultimate position: Voltage identifier, 50 Hz: 230 V Δ / 400 V Y	400 V Δ / 690 V Y	500 V Y	500 V Δ	60 Hz: 460 V Y (Outputs at 60 Hz see "Technical information")	460 V Δ	Final position: Type of construction identifier, IM B 3	Price supplement: IM B 5	IM V 1 Without protective cover	IM V 1 With protective cover	IM B 14 With standard flange	IM B 14 With special flange	IM B 35
1LA7 050 to 1LA7 096	**1**	**6**	**3**	**–**	**1**	**6**	**0**	**1**	**1**	**4**	**2**	**3**	**6**
1LA7 106 to 1LA7 166	**1**	**6**	**3**	**5**	**1**	**6**	**0**	**1**	**1**	**4**	**2**	**3**	**6**
1LA5 183 to 1LA5 223	**1**	**6**	**3**	**5**	**1**	**6**	**0**	**1**	**1**	**4**	**–**	**–**	**6**

Other voltage and/or frequency, voltage identifier **"9"**.
Order codes are required for this purpose (see "Technical information", "Voltages, currents and frequencies").

For other types of construction, see "Technical information", "Types of construction".

1) For connection to 230 V, parallel supply cables are required (see "Technical information", "Connections, circuits and terminal blocks").

Rated output	Size	Order No. / Order No. supplement for voltage and type of construction, see table below	Operating data at rated output: Rated speed	Efficiency η at 4/4-load	Efficiency η at 3/4-load	Power factor p.f.	Rated current at 400 V	Rated torque	Starting torque (For direct-on-line starting as multiple of the rated torque)	Starting current (as multiple of the rated current)	Stalling torque (as multiple of the rated torque)	Torque class	Moment of inertia J	Weight: Type of constr. IM B 3 approx.
kW			rpm	%	%		A	Nm				KL	kg m²	kg
Energy-saving motor, IP55 degree of protection, temperature class F														
	1000 rpm, 6-pole, 50 Hz													
0.09	63 M	**1LA7 063–6AB . .**	850	45.0	41.5	0.66	0.44	1.0	1.8	2.0	1.9	13	0.00037	4
0.18	71 M	**1LA7 070–6AA . .**	850	53.0	54.5	0.73	0.67	2.0	2.1	2.3	1.9	16	0.00055	5
0.25		**1LA7 073–6AA . .**	860	60.0	58.5	0.76	0.79	2.8	2.2	2.7	2.0	16	0.00080	6
0.37	80 M	**1LA7 080–6AA . .**	920	62.0	60.5	0.72	1.20	3.8	1.9	3.1	2.1	16	0.0014	9
0.55		**1LA7 083–6AA . .**	910	67.0	66.5	0.74	1.60	5.8	2.1	3.4	2.2	16	0.0017	10
0.75	90 S	**1LA7 090–6AA . .**	915	69.0	69.0	0.76	2.05	7.8	2.2	3.7	2.2	16	0.0024	13
1.1	90 L	**1LA7 096–6AA . .**	915	72.0	72.0	0.77	2.85	11	2.3	3.8	2.3	16	0.0033	16
1.5	100 L	**1LA7 106–6AA . .**	925	74.0	74.0	0.75	3.90	15	2.3	4.0	2.3	16	0.0047	21
2.2	112 M	**1LA7 113–6AA . .**	940	78.0	78.5	0.78	5.20	22	2.2	4.6	2.5	16	0.0091	26
3	132 S	**1LA7 130–6AA . .**	950	79.0	79.5	0.76	7.20	30	1.9	4.2	2.2	16	0.015	38
4	132 M	**1LA7 133–6AA . .**	950	80.5	80.5	0.76	9.40	40	2.1	4.5	2.4	16	0.019	44
5.5	132 M	**1LA7 134–6AA . .**	950	83.0	83.0	0.76	12.6	55	2.3	5.0	2.6	16	0.025	52
7.5	160 M	**1LA7 163–6AA . .**	960	86.0	86.0	0.74	17.0	75	2.1	4.6	2.5	16	0.044	74
11	160 L	**1LA7 166–6AA . .**	960	87.5	87.5	0.74	24.5	109	2.3	4.8	2.6	16	0.063	95
15	180 L	**1LA5 186–6AA . .**	970	89.5	89.5	0.77	31.5	148	2.0	5.2	2.4	16	0.15	126
18.5	200 L	**1LA5 206–6AA . .**	975	90.2	90.2	0.77	38.5	181	2.7	5.5	2.8	16	0.24	161
22		**1LA5 207–6AA . .**	975	90.8	90.8	0.77	45.5	215	2.8	5.5	2.9	16	0.28	183
30	225 M	**1LA5 223–6AA . .**	978	91.8	91.8	0.77	61.0 [1])	293	2.8	5.7	2.9	16	0.36	214
	750 rpm, 8-pole, 50 Hz													
0.09	71 M	**1LA7 070–8AB . .**	630	53.0	54.5	0.68	0.36	1.4	1.9	2.2	1.7	13	0.00080	6
0.12		**1LA7 073–8AB . .**	645	53.0	49.5	0.64	0.51	1.8	2.2	2.2	2.0	13	0.00080	6
0.18	80 M	**1LA7 080–8AB . .**	675	51.0	49.5	0.68	0.75	2.5	1.7	2.3	1.9	13	0.0014	9
0.25		**1LA7 083–8AB . .**	685	55.0	50.5	0.64	1.02	3.5	2.0	2.6	2.2	13	0.0017	10
0.37	90 S	**1LA7 090–8AB . .**	675	63.0	62.0	0.75	1.14	5.2	1.6	2.9	1.8	13	0.0023	11
0.55	90 L	**1LA7 096–8AB . .**	675	66.0	65.0	0.76	1.58	7.8	1.7	3.0	1.9	13	0.0031	13
0.75	100 L	**1LA7 106–8AB . .**	680	66.0	65.0	0.76	2.15	11	1.6	3.0	1.9	13	0.0051	19
1.1		**1LA7 107–8AB . .**	680	72.0	72.0	0.76	2.90	15	1.8	3.3	2.1	13	0.0063	22
1.5	112 M	**1LA7 113–8AB . .**	705	74.0	74.0	0.76	3.85	20	1.8	3.7	2.1	13	0.013	24
2.2	132 S	**1LA7 130–8AB . .**	700	75.0	75.0	0.74	5.70	30	1.9	3.9	2.3	13	0.014	38
3	132 M	**1LA7 133–8AB . .**	700	77.0	77.5	0.74	7.60	41	2.1	4.1	2.4	13	0.019	44
4	160 M	**1LA7 163–8AB . .**	715	80.0	80.0	0.72	10.0	53	2.2	4.5	2.6	13	0.036	64
5.5	160 M	**1LA7 164–8AB . .**	710	83.5	83.5	0.73	13.0	74	2.3	4.7	2.7	13	0.046	74
7.5	160 L	**1LA7 166–8AB . .**	715	85.5	85.5	0.72	17.6	100	2.7	5.3	3.0	13	0.064	94
11	180 L	**1LA5 186–8AB . .**	725	87.0	87.0	0.75	24.5	145	2.0	5.0	2.2	13	0.21	128
15	200 L	**1LA5 207–8AB . .**	725	87.5	87.5	0.78	31.5	198	2.1	5.0	2.2	13	0.37	176
18.5	225 S	**1LA5 220–8AB . .**	725	89.2	89.2	0.79	38.0	244	2.1	4.5	2.2	13	0.37	184
22	225 M	**1LA5 223–8AB . .**	725	90.6	90.6	0.79	44.5	290	2.2	4.8	2.3	13	0.45	214

Higher outputs under "1LA/1LG · Cast iron housings" on Pages 3/14 and 3/15.

Order No. supplements

Motor type	Penultimate position: Voltage identifier, 50 Hz: 230 VΔ / 400 VY	400 VΔ / 690 VY	500 VY	500 VΔ	60 Hz: 460 VY (Outputs at 60 Hz see "Technical information")	460 VΔ	Final position: Type of construction identifier, IM B 3	Price supplement: IM B 5	IM V 1 Without protective cover	IM V 1 With protective cover	IM B 14 With standard flange	IM B 14 With special flange	IM B 35
1LA7 063 to 1LA7 096	**1**	**6**	**3**	**–**	**1**	**6**	**0**	**1**	**1**	**4**	**2**	**3**	**6**
1LA7 106 to 1LA7 166	**1**	**6**	**3**	**5**	**1**	**6**	**0**	**1**	**1**	**4**	**2**	**3**	**6**
1LA5 186 to 1LA5 223	**1**	**6**	**3**	**5**	**1**	**6**	**0**	**1**	**1**	**4**	**–**	**–**	**6**

Other voltage and/or frequency, voltage identifier **"9"**.
Order codes are required for this purpose (see "Technical information", "Voltages, currents and frequencies").

For other types of construction, see "Technical information", "Types of construction".

1) For connection to 230 V, parallel supply cables are required (see "Technical information", "Connections, circuits and terminal blocks").

Selection and ordering data

■ 50 Hz

The motors can also be used for 60 Hz according to EPACT, see Pages 3/6 and 3/7.

For further details, see "Technical information", "Motors for the US market".

3

Rated output	Size	Order No. / Order No. supplement for voltage and type of construction, see table below	Efficiency class	Operating data at rated output: Rated speed	Efficiency η at 4/4-load	Efficiency η at 3/4-load	Power factor p.f.	Rated current at 400 V	Rated torque	Starting torque (For direct-on-line starting as multiple of the rated torque)	Starting current (For direct-on-line starting as multiple of the rated current)	Stalling torque (For direct-on-line starting as multiple of the rated torque)	Torque class	Moment of inertia J	Weight Type of constr. IM B 3 approx.
kW			EFF 1	rpm	%	%		A	Nm				KL	kg m²	kg
Energy-saving motor to CEMEP "High Efficiency" eff1, IP55 degree of protection, temperature class F															EFF 1
	3000 rpm, 2-pole, 50 Hz														
0.09	56 M	**1LA9 050–2KA . .**		2830	68.0	68.0	0.79	0.24	0.30	2.9	4.5	3.0	16	0.00015	3
0.12		**1LA9 053–2KA . .**		2830	69.0	69.0	0.81	0.31	0.40	2.6	4.3	2.8	16	0.00020	4
0.18	63 M	**1LA9 060–2KA . .**		2840	70.0	70.0	0.78	0.48	0.61	2.5	4.8	3.1	16	0.00022	4
0.25		**1LA9 063–2KA . .**		2830	70.0	70.0	0.82	0.63	0.84	2.3	4.9	2.5	16	0.00026	5
0.37	71 M	**1LA9 070–2KA . .**		2840	74.0	74.0	0.77	0.94	1.2	3.1	6.5	3.1	16	0.00041	6
0.55		**1LA9 073–2KA . .**		2835	75.0	75.0	0.75	1.42	1.9	3.0	6.3	2.9	16	0.00050	7
0.75	80 M	**1LA9 080–2KA . .**		2870	80.0	80.0	0.84	1.65	2.5	3.5	8.3	3.2	16	0.0010	10
1.1		**1LA9 083–2KA . .**	**1**	2860	84.0	84.0	0.89	2.15	3.7	3.2	7.0	3.2	16	0.0013	12
1.5	90 S	**1LA9 090–2KA . .**	**1**	2890	85.0	85.0	0.87	2.95	5.0	3.5	7.0	3.5	16	0.0018	15
2.2	90 L	**1LA9 096–2KA . .**	**1**	2890	86.5	86.5	0.87	4.25	7.3	3.5	7.0	3.5	16	0.0022	18
3	100 L	**1LA9 106–2KA . .**	**1**	2890	87.0	87.0	0.88	5.70	9.9	3.1	7.0	3.2	16	0.0044	24
4	112 M	**1LA9 113–2KA . .**	**1**	2905	88.5	88.5	0.89	7.40	13	2.6	7.0	3.2	16	0.0077	35
5.5	132 S	**1LA9 130–2KA . .**	**1**	2930	89.5	89.5	0.90	9.90	18	2.4	7.0	3.2	16	0.019	43
7.5		**1LA9 131–2KA . .**	**1**	2930	90.5	90.5	0.92	13.0	24	2.5	7.0	3.1	16	0.024	56
11	160 M	**1LA9 163–2KA . .**	**1**	2945	91.0	91.0	0.90	19.4	36	2.3	7.0	3.1	16	0.044	73
15	160 M	**1LA9 164–2KA . .**	**1**	2945	91.5	91.5	0.90	26.3	49	2.3	7.0	3.1	16	0.051	82
18.5	160 L	**1LA9 166–2KA . .**	**1**	2940	92.3	92.5	0.92	31.5	60	2.3	7.0	3.1	16	0.065	102
22	180 M	**1LA9 183–2WA . .**	**1**	2945	93.0	93.2	0.89	38.0 [1]	71	2.5	7.2	3.3	16	0.090	131
30	200 L	**1LA9 206–2WA . .**	**1**	2950	93.5	93.5	0.89	52.0	97	2.4	7.0	3.2	16	0.16	185
37		**1LA9 207–2WA . .**	**1**	2950	94.0	94.1	0.89	64.0 [1]	120	2.4	7.0	3.3	16	0.20	214
	1500 rpm, 4-pole, 50 Hz														
0.06	56 M	**1LA9 050–4KA . .**		1380	61.0	61.0	0.66	0.22	0.42	2.7	3.1	2.8	16	0.00027	3
0.09		**1LA9 053–4KA . .**		1390	62.0	62.0	0.68	0.31	0.62	2.7	3.2	2.8	16	0.00035	4
0.12	63 M	**1LA9 060–4KA . .**		1395	66.0	66.0	0.65	0.41	0.82	2.6	3.5	2.6	16	0.00037	4
0.18		**1LA9 063–4KA . .**		1340	62.0	62.0	0.68	0.62	1.3	2.9	3.2	2.5	16	0.00045	5
0.25	71 M	**1LA9 070–4KA . .**		1410	70.0	70.0	0.64	0.81	1.7	3.2	4.3	3.1	16	0.00076	6
0.37		**1LA9 073–4KA . .**		1385	71.0	71.0	0.73	1.03	2.6	2.8	4.2	3.0	16	0.00095	7
0.55	80 M	**1LA9 080–4KA . .**		1410	77.0	77.0	0.78	1.32	3.7	2.8	5.6	2.9	16	0.0017	10
0.75		**1LA9 083–4KA . .**		1400	81.0	81.0	0.75	1.80	5.1	3.6	5.8	3.5	16	0.0024	12
1.1	90 S	**1LA9 090–4KA . .**	**1**	1440	84.0	84.0	0.77	2.45	7.3	2.7	6.4	3.2	16	0.0033	15
1.5	90 L	**1LA9 096–4KA . .**	**1**	1440	85.0	85.0	0.77	3.30	9.9	3.1	6.7	3.4	16	0.0040	18
2.2	100 L	**1LA9 106–4KA . .**	**1**	1435	86.5	86.5	0.82	4.55	15	3.1	7.0	3.6	16	0.0062	25
3		**1LA9 107–4KA . .**	**1**	1435	87.5	87.7	0.81	6.10	20	3.5	7.0	3.9	16	0.0077	30
4	112 M	**1LA9 113–4KA . .**	**1**	1440	88.5	89.0	0.81	8.10	27	2.8	6.9	3.2	16	0.014	37
5.5	132 S	**1LA9 130–4KA . .**	**1**	1455	89.5	89.5	0.84	10.6	36	2.9	7.0	3.6	16	0.023	45
7.5	132 M	**1LA9 133–4KA . .**	**1**	1455	90.3	90.5	0.84	14.3	49	3.0	7.0	3.6	16	0.029	60
11	160 M	**1LA9 163–4KA . .**	**1**	1460	91.5	92.0	0.85	20.5	72	2.7	6.9	3.2	16	0.055	81
15	160 L	**1LA9 166–4KA . .**	**1**	1460	92.0	92.3	0.86	27.5	98	2.9	7.0	3.3	16	0.072	107
18.5	180 M	**1LA9 183–4WA . .**	**1**	1465	92.5	93.0	0.84	34.5 [1]	121	2.5	7.0	3.2	16	0.15	126
22	180 L	**1LA9 186–4WA . .**	**1**	1465	93.0	93.4	0.84	40.5 [1]	143	2.6	7.3	3.4	16	0.19	146
30	200 L	**1LA9 207–4WA . .**	**1**	1465	93.5	94.0	0.87	53.0	196	2.6	7.0	3.2	16	0.32	199

Higher outputs under "1LG · Cast iron housing" on Page 3/16.

Order No. supplements

See Page 3/5.

1) For connection to 230 V, parallel supply cables are required (see "Technical information", "Connections, circuits and terminal blocks").

Rated output	Size	Order No. / Order No. supplement for voltage and type of construction, see table below	Efficiency class	Operating data at rated output: Rated speed	Efficiency η at 4/4-load	Efficiency η at 3/4-load	Power factor p.f.	Rated current at 400 V	Rated torque	Starting torque (For direct-on-line starting as multiple of the rated torque)	Starting current (multiple of the rated current)	Stalling torque (multiple of the rated torque)	Torque class	Moment of inertia J	Weight Type of constr. IM B 3 approx.
kW			EFF1	rpm	%	%		A	Nm				KL	kg m²	kg
Energy-saving motor, IP55 degree of protection, temperature class F															
	1000 rpm, 6-pole, 50 Hz														
0.75	90 S	**1LA9 090–6KA . .**		925	75.5	75.5	0.72	2.00	7.7	2.5	4.4	2.5	16	0.0033	16
1.1	90 L	**1LA9 096–6KA . .**		940	82.0	82.0	0.70	2.80	11	3.2	5.7	3.2	16	0.0050	19
1.5	100 L	**1LA9 106–6KA . .**		950	85.0	85.0	0.70	3.65	15	3.4	6.2	3.4	16	0.0065	25
2.2	112 M	**1LA9 113–6KA . .**		955	84.0	84.0	0.70	5.40	22	2.7	6.2	3.0	16	0.014	37
4	132 M	**1LA9 133–6KA . .**		950	84.0	84.0	0.81	8.50	40	2.5	6.3	2.7	16	0.025	49
5.5		**1LA9 134–6KA . .**		960	86.0	86.0	0.77	12.0	55	3.3	7.3	3.6	16	0.030	64
7.5	160 M	**1LA9 163–6KA . .**		965	88.0	88.0	0.72	17.1	74	2.2	5.5	2.5	16	0.063	98
11	160 L	**1LA9 166–6KA . .**		960	88.5	88.5	0.78	23.0	109	2.9	6.9	3.2	16	0.072	105
15	180 L	**1LA9 186–6WA . .**		970	91.0	91.0	0.75	31.5	148	2.0	6.5	2.5	16	0.19	144
18.5	200 L	**1LA9 206–6WA . .**		975	91.0	91.0	0.77	38.0	181	2.5	6.2	2.5	16	0.28	186
22		**1LA9 207–6WA . .**		975	91.5	91.5	0.77	45.0	215	2.5	6.2	2.5	16	0.36	217

Higher outputs under "1LG · Cast iron housing" on Page 3/17.

Order No. supplements

Motor type	Penultimate position: Voltage identifier 50 Hz: 230 V∆ / 400 VY	400 V∆ / 690 VY	500 VY	500 V∆	60 Hz: 460 VY	460 V∆	Final position: Type of construction identifier IM B 3	Price supplement IM B 5	IM V 1 Without protective cover	IM V 1 With protective cover	IM B 14 With standard flange	IM B 14 With special flange	IM B 35
1LA9 050 to 1LA9 096	**1**	**6**	**3**	**–**	1	6	**0**	**1**	**1**	**4**	**2**	**3**	**6**
1LA9 106 to 1LA9 166	**1**	**6**	**3**	**5**	1	6	**0**	**1**	**1**	**4**	**2**	**3**	**6**
1LA9 183 to 1LA9 207	**1**	**6**	**3**	**5**	1	6	**0**	**1**	**1**	**4**	**–**	**–**	**6**

Other voltage and/or frequency, voltage identifier **"9"**.
Order codes are required for this purpose (see "Technical information", "Voltages, currents and frequencies").

For other types of construction, see "Technical information", "Types of construction".

Selection and ordering data

■ 60 Hz

The motors can also be used for 50 Hz "High Efficiency" eff1, see Pages 3/4 and 3/5.

For further details, see "Technical information", "Motors for the US market".

3

Rated output	Size	Order No.	Operating data at rated output					Starting torque	Starting current	Stalling torque	Torque class	Moment of inertia	Weight
		Order No. supplement for voltage and type of construction, see table below	Rated speed	Nominal efficiency	Power factor p.f.	Rated current at 460 V	Rated torque	For direct-on-line starting as multiple of the rated					Type of constr. IM B 3 approx.
								torque	current	torque			
HP			rpm	%		A	Nm				KL	kg m²	kg
Energy-saving motor according to EPACT, IP55 degree of protection, temperature class F													**CC 032A**
	3600 rpm, 2-pole, 60 Hz												
0.12	56 M	**1LA9 050–2KA . .**	3440	70.0	0.74	0.22	0.25	3.6	5.5	3.8	16	0.00015	3
0.16		**1LA9 053–2KA . .**	3440	71.0	0.76	0.28	0.33	3.2	5.4	3.4	16	0.00020	4
0.25	63 M	**1LA9 060–2KA . .**	3440	71.0	0.79	0.43	0.53	2.8	4.9	3.3	16	0.00022	4
0.33		**1LA9 063–2KA . .**	3430	72.0	0.83	0.52	0.69	2.5	5.0	2.7	16	0.00026	5
0.5	71 M	**1LA9 070–2KA . .**	3445	72.0	0.75	0.87	1.00	3.3	7.5	3.4	16	0.00041	6
0.75		**1LA9 073–2KA . .**	3445	73.0	0.73	1.32	1.60	3.6	7.2	3.7	16	0.00050	7
1 •	80 M	**1LA9 080–2KA . .**	3485	75.5	0.82	1.52	2.00	4.4	9.6	4.4	16	0.0010	10
1.5 •		**1LA9 083–2KA . .**	3480	82.5	0.88	1.94	3.10	3.8	8.6	3.2	16	0.0013	12
2 •	90 S	**1LA9 090–2KA . .**	3510	84.0	0.86	2.60	4.10	4.1	8.6	4.1	16	0.0018	15
3 •	90 L	**1LA9 096–2KA . .**	3510	85.5	0.85	3.85	6.10	4.1	8.5	5.1	16	0.0022	18
4	100 L	**1LA9 106–2KA . .**	3510	86.5	0.87	4.95	8.10	3.4	8.6	3.7	16	0.0044	24
5 •	112 M	**1LA9 113–2KA . .**	3525	87.5	0.88	6.10	10	2.8	9.2	4.0	16	0.0077	35
7.5 •	132 S	**1LA9 130–2KA . .**	3540	88.5	0.90	8.80	15	2.7	8.5	3.8	16	0.019	43
10 •		**1LA9 131–2KA . .**	3540	89.5	0.92	11.4	20	2.8	8.3	3.7	16	0.024	56
15 •	160 M	**1LA9 163–2KA . .**	3555	90.2	0.90	17.2	30	2.5	8.5	3.7	16	0.044	73
20 •	160 M	**1LA9 164–2KA . .**	3555	90.2	0.90	23.0	40	2.5	8.5	3.7	16	0.051	82
25 •	160 L	**1LA9 166–2KA . .**	3550	91.0	0.92	28.0	50	2.4	8.5	3.5	16	0.065	102
30 •	180 M	**1LA9 183–2WA . .**	3545	91.0	0.86	36.0	60	2.6	8.6	3.5	16	0.090	131
40 •	200 L	**1LA9 206–2WA . .**	3555	91.7	0.88	46.5	80	2.5	8.4	3.6	16	0.16	182
50 •		**1LA9 207–2WA . .**	3555	92.4	0.88	58.0	100	2.7	8.4	3.7	16	0.2	211
	1800 rpm, 4-pole, 60 Hz												
0.08	56 M	**1LA9 050–4KA . .**	1715	63.0	0.65	0.18	0.33	2.7	3.4	3.0	16	0.00027	3
0.12		**1LA9 053–4KA . .**	1725	64.0	0.67	0.26	0.50	2.8	3.5	3.0	16	0.00035	4
0.16	63 M	**1LA9 060–4KA . .**	1720	69.0	0.65	0.34	0.66	2.7	3.9	2.8	16	0.00037	4
0.25		**1LA9 063–4KA . .**	1660	65.0	0.67	0.54	1.1	3.0	3.6	3.1	16	0.00045	5
0.33	71 M	**1LA9 070–4KA . .**	1730	69.0	0.60	0.75	1.4	3.6	4.9	3.4	16	0.00076	6
0.5		**1LA9 073–4KA . .**	1725	70.0	0.68	0.98	2.1	3.3	4.9	3.4	16	0.00095	7
0.75	80 M	**1LA9 080–4KA . .**	1725	75.5	0.74	1.26	3.1	3.4	6.8	3.6	16	0.0017	10
1 •		**1LA9 083–4KA . .**	1720	82.5	0.72	1.58	4.1	4.0	7.3	3.9	16	0.0024	12
1.5 •	90 S	**1LA9 090–4KA . .**	1755	84.0	0.76	2.20	6.1	3.1	7.7	3.9	16	0.0033	15
2 •	90 L	**1LA9 096–4KA . .**	1755	84.0	0.76	2.95	8.1	3.6	8.1	4.2	16	0.0040	18
3	100 L	**1LA9 106–4KA . .**	1750	87.5	0.79	4.05	12	3.4	8.4	4.3	16	0.0062	25
4		**1LA9 107–4KA . .**	1750	87.5	0.79	5.40	16	3.8	8.7	4.6	16	0.0077	30
5 •	112 M	**1LA9 113–4KA . .**	1755	87.5	0.79	6.80	20	3.2	8.6	3.9	16	0.014	37
7.5 •	132 S	**1LA9 130–4KA . .**	1760	89.5	0.81	9.70	30	3.2	8.7	4.1	16	0.023	45
10 •	132 M	**1LA9 133–4KA . .**	1760	89.5	0.82	12.8	40	3.4	8.7	4.1	16	0.029	60
15 •	160 M	**1LA9 163–4KA . .**	1765	91.0	0.85	18.2	61	2.6	8.1	3.2	16	0.055	81
20 •	160 L	**1LA9 166–4KA . .**	1765	91.0	0.85	24.0	81	2.8	8.5	3.5	16	0.072	107
25 •	180 M	**1LA9 183–4WA . .**	1770	92.4	0.83	30.5	101	2.8	8.4	3.6	16	0.15	126
30 •	180 L	**1LA9 186–4WA . .**	1770	92.4	0.83	36.5	121	3.1	8.8	3.9	16	0.19	146
40 •	200 L	**1LA9 207–4WA . .**	1770	93.0	0.86	47.0	161	3.0	8.3	3.6	16	0.32	196

Higher outputs under "1LG · Cast iron housing" on Page 3/18.
• With CC No. CC 032A

Order No. supplements

See Page 3/7.

Rated output	Size	Order No.	Operating data at rated output					Starting torque	Starting current	Stalling torque	Torque class	Moment of inertia J	Weight
		Order No. supplement for voltage and type of construction, see table below	Rated speed	Nominal efficiency	Power factor p.f.	Rated current at 460 V	Rated torque	For direct-on-line starting as multiple of the rated					Type of constr. IM B 3 approx.
								torque	current	torque			
HP			rpm	%		A	Nm				KL	kg m²	kg
Energy-saving motor according to EPACT, IP55 degree of protection, temperature class F													**CC 032A**
	1200 rpm, 6-pole, 60 Hz												
1 ●	90 S	**1LA9 090–6KA . .**	1140	80.0	0.66	1.78	6.2	3.0	5.6	3.0	16	0.0033	16
1.5 ●	90 L	**1LA9 096–6KA . .**	1150	85.5	0.64	2.55	9.3	3.7	6.4	3.7	16	0.0050	19
2	100 L	**1LA9 106–6KA . .**	1160	86.5	0.68	3.20	12	3.5	7.2	3.8	16	0.0065	25
3 ●	112 M	**1LA9 113–6KA . .**	1160	87.5	0.66	4.85	18	2.9	7.5	3.7	16	0.014	37
5 ●	132 M	**1LA9 133–6KA . .**	1160	87.5	0.77	6.90	31	3.0	7.9	3.6	16	0.025	49
7.5 ●	132 M	**1LA9 134–6KA . .**	1160	89.5	0.73	10.8	46	3.7	8.4	4.3	16	0.034	64
10 ●	160 M	**1LA9 163–6KA . .**	1165	89.5	0.70	15.0	61	2.4	6.4	2.8	16	0.063	98
15 ●	160 L	**1LA9 166–6KA . .**	1165	90.2	0.77	20.0	92	3.1	8.3	3.8	16	0.072	105
20 ●	180 L	**1LA9 186–6WA . .**	1175	90.2	0.75	27.5	121	2.2	7.1	2.8	16	0.19	144
25 ●	200 L	**1LA9 206–6WA . .**	1175	91.7	0.75	34.0	152	2.8	7.1	2.8	16	0.28	183
30 ●		**1LA9 207–6WA . .**	1175	91.7	0.75	41.0	182	2.8	7.2	2.8	16	0.36	214

Higher outputs under "1LG · Cast iron housing" on Page 3/19.
● With CC No. CC 032A

Order No. supplements

Motor type	Penultimate position: Voltage identifier						Final position: Type of construction identifier						
	50 Hz				60 Hz		IM B 3	Price supplement					
	230 V△ / 400 VY	400 V△ / 690 VY	500 VY	500 V△	460 VY	460 V△		IM B 5	IM V 1 Without protective cover	IM V 1 With protective cover	IM B 14 With standard flange	IM B 14 With special flange	IM B 35
1LA9 050 to 1LA9 096	1	6	3	–	**1**	**6**	**0**	1	1	4	2	3	**6**
1LA9 106 to 1LA9 166	1	6	3	5	**1**	**6**	**0**	1	1	4	2	3	**6**
1LA9 183 to 1LA9 207	1	6	3	5	**1**	**6**	**0**	1	1	4	–	–	**6**

Other voltage and/or frequency, voltage identifier **"9"**.
Order codes are required for this purpose (see "Technical information", "Voltages, currents and frequencies").

For other types of construction, see "Technical information", "Types of construction".

Selection and ordering data

Rated output	Size	Order No. / Order No. supplement for voltage and type of construction, see table below	Operating data at rated output: Rated speed	Efficiency η	Power factor p.f.	Rated current at 400 V	Rated torque	Starting torque (For direct-on-line starting as multiple of the rated torque)	Starting current (as multiple of the rated current)	Stalling torque (as multiple of the rated torque)	Torque class	Moment of inertia J	Weight: Type of constr. IM B 3 approx.
kW			rpm	%		A	Nm				KL	kg m²	kg
IP55 degree of protection, temperature class F, used acc. to class F													
	3000 rpm, 2-pole, 50 Hz												
0.20	56 M	**1LA9 053–2LA . .**	2830	69.0	0.82	0.51	0.67	2.1	4.5	2.3	16	0.00020	4
0.33	63 M	**1LA9 060–2LA . .**	2775	68.0	0.80	0.88	1.1	2.3	4.4	2.2	16	0.00022	4
0.45		**1LA9 063–2LA . .**	2720	68.0	0.84	1.14	1.6	2.2	4.2	2.3	16	0.00026	5
0.65	71 M	**1LA9 070–2LA . .**	2720	72.0	0.83	1.56	2.3	2.4	4.5	2.5	16	0.00041	6
0.94		**1LA9 073–2LA . .**	2735	73.0	0.82	2.25	3.3	2.5	4.8	2.4	16	0.00050	7
1.45	80 M	**1LA9 080–2LA . .**	2820	76.0	0.83	3.30	4.9	3.1	6.7	3.1	16	0.0010	10
1.75		**1LA9 083–2LA . .**	2840	77.0	0.82	4.00	5.9	3.7	7.4	3.5	16	0.0013	12
2.9	90 S	**1LA9 090–2LA . .**	2825	81.0	0.82	6.30	9.8	3.2	6.5	3.0	16	0.0018	15
3.8	90 L	**1LA9 096–2LA . .**	2810	81.0	0.85	8.00	13	3.1	6.5	2.7	16	0.0022	18
4.4	100 L	**1LA9 106–2LA . .**	2880	82.0	0.83	9.30	15	3.0	7.8	3.2	16	0.0044	24
6.5	112 M	**1LA9 113–2LA . .**	2900	85.0	0.83	13.2	21	3.0	8.6	3.8	16	0.0077	35
9	132 S	**1LA9 130–2LA . .**	2915	87.0	0.90	16.6	29	2.0	6.4	2.6	16	0.019	43
12		**1LA9 131–2LA . .**	2915	87.0	0.89	22.5	39	3.0	7.4	3.2	16	0.024	56
18	160 M	**1LA9 163–2LA . .**	2920	89.0	0.87	33.5	59	2.2	7.0	3.1	16	0.044	73
21	160 M	**1LA9 164–2LA . .**	2930	90.0	0.91	37.0	68	2.0	6.9	2.7	16	0.051	82
26	160 L	**1LA9 166–2LA . .**	2935	91.0	0.91	45.5	85	2.2	7.7	3.2	16	0.065	102
33	180 M	**1LA9 183–2AA . .**	2940	92.0	0.86	60.0	107	2.5	7.4	3.3	16	0.090	131
44	200 L	**1LA9 206–2AA . .**	2945	92.0	0.86	80.0	143	2.4	7.8	3.2	16	0.16	182
53		**1LA9 207–2AA . .**	2945	92.5	0.87	95.0	172	2.6	8.2	3.3	16	0.20	211
	1500 rpm, 4-pole, 50 Hz												
0.14	56 M	**1LA9 053–4LA . .**	1385	62.0	0.74	0.44	0.97	2.3	3.5	2.2	16	0.00035	4
0.21	63 M	**1LA9 060–4LA . .**	1335	60.0	0.77	0.66	1.5	2.1	2.9	2.1	16	0.00037	4
0.29		**1LA9 063–4LA . .**	1330	60.0	0.71	0.98	2.1	2.3	2.9	2.3	16	0.00045	5
0.45	71 M	**1LA9 070–4LA . .**	1340	64.0	0.71	1.42	3.2	2.3	3.4	2.3	16	0.00076	6
0.60		**1LA9 073–4LA . .**	1340	70.0	0.75	1.64	4.3	2.3	3.6	2.3	16	0.00095	7
0.90	80 M	**1LA9 080–4LA . .**	1340	70.0	0.81	2.30	6.4	2.3	4.1	2.4	16	0.0017	10
1.25		**1LA9 083–4LA . .**	1340	70.0	0.83	3.10	8.9	2.7	4.5	2.4	16	0.0024	12
1.8	90 S	**1LA9 090–4LA . .**	1380	77.0	0.83	4.05	12	2.4	5.1	2.4	16	0.0033	15
2.5	90 L	**1LA9 096–4LA . .**	1390	76.0	0.81	5.90	17	2.5	5.1	2.3	16	0.0040	18
4.0	100 L	**1LA9 107–4LA . .**	1410	77.0	0.81	9.30	27	2.7	6.0	3.0	16	0.0062	25
5.5	112 M	**1LA9 113–4LA . .**	1440	82.0	0.80	12.2	36	3.0	6.8	3.0	16	0.014	37
8.6	132 S	**1LA9 130–4LA . .**	1440	84.0	0.83	17.8	57	2.3	6.8	2.7	16	0.023	45
11	132 M	**1LA9 133–4LA . .**	1450	85.0	0.83	22.5	72	2.8	7.4	3.1	16	0.029	60
17	160 M	**1LA9 163–4LA . .**	1455	88.0	0.84	33.0	112	2.9	7.5	2.8	16	0.055	81
22	160 L	**1LA9 166–4LA . .**	1455	88.0	0.82	44.0	144	3.1	8.3	3.4	16	0.072	107
26	180 M	**1LA9 183–4AA . .**	1460	90.5	0.83	50.0	170	2.4	7.5	3.2	16	0.15	126
32	180 L	**1LA9 186–4AA . .**	1465	91.3	0.84	60.0	209	2.5	7.9	3.4	16	0.19	146
43	200 L	**1LA9 207–4AA . .**	1465	91.7	0.85	80.0	280	2.7	7.8	3.5	16	0.32	196

Higher outputs under "1LG · Cast iron housing" on Page 3/20.

Order No. supplements

Motor type	Penultimate position: Voltage identifier, 50 Hz: 230 VΔ / 400 VY	400 VΔ / 690 VY	500 VY	500 VΔ	60 Hz: 460 VY	460 VΔ	Final position: Type of construction identifier: IM B 3	Price supplement: IM B 5	IM V 1 Without protective cover	IM V 1 With protective cover	IM B 14 With standard flange	IM B 14 With special flange	IM B 35
1LA9 050 to 1LA9 096	**1**	**6**	**3**	**–**	**1**	**6**	**0**	**1**	**1**	**4**	**2**	**3**	**6**
1LA9 106 to 1LA9 166	**1**	**6**	**3**	**5**	**1**	**6**	**0**	**1**	**1**	**4**	**2**	**3**	**6**
1LA9 183 to 1LA9 207	**1**	**6**	**3**	**5**	**1**	**6**	**0**	**1**	**1**	**4**	**–**	**–**	**6**

Other voltage and/or frequency, voltage identifier **"9"**.
Order codes are required for this purpose (see "Technical information", "Voltages, currents and frequencies").

For other types of construction , see "Technical information", "Types of construction".

Pole-change motors

The torque classification for pole-change motors only applies once the lowest speed has been activated until the operating speed when it is switched over to the next highest speed.

The motors can only be started direct-on-line.
For circuit diagrams, see online help in SD configurator.

Rated output		Size	Order No.	Operating data at rated output			Starting torque		Starting current		Stalling torque		Torque class	Moment of inertia J	Weight
			Order No. supplement for voltage and type of construction, see table below	Rated speed	Rated current at 400 V		For direct-on-line starting as multiple of the rated								Type of constr. IM B 3
1500 rpm	3000 rpm				1500 rpm	3000 rpm	1500 rpm	3000 rpm	1500 rpm	3000 rpm	1500 rpm	3000 rpm			approx.
kW	**kW**			rpm	A	A							KL	kg m²	kg
Two-speed pole-change, IP55 degree of protection, temperature class F															
		1500/3000 rpm, 4-/2-pole, 50 Hz, version with one winding in Dahlander circuit													
0.1	**0.15**	63 M	**1LA7 060–0AA . .**	1330/2650	0.41	0.51	1.8	1.8	2.7	2.9	1.8	1.8	10	0.00029	4
0.15	**0.2**		**1LA7 063–0AA . .**	1330/2700	0.51	0.58	2.0	2.0	3.0	3.3	2.0	2.0	10	0.00037	4
0.21	**0.28**	71 M	**1LA7 070–0AA . .**	1375/2700	0.70	1.1	1.6	1.6	3.0	3.1	1.8	1.8	10	0.00052	5
0.3	**0.43**		**1LA7 073–0AA . .**	1380/2770	0.89	1.3	1.8	1.8	3.7	3.8	2.0	2.0	10	0.00076	7
0.48	**0.6**	80 M	**1LA7 080–0AA . .**	1390/2810	1.25	1.6	1.7	1.7	3.9	4.0	2.0	2.0	10	0.0014	9
0.7	**0.85**		**1LA7 083–0AA . .**	1390/2810	1.75	2.1	1.8	1.8	4.3	4.3	2.1	2.1	10	0.0017	10
1.1	**1.4**	90 S	**1LA7 090–0AA . .**	1390/2810	2.70	3.6	1.6	1.8	4.2	4.3	1.9	2.0	13	0.0024	13
1.5	**1.9**	90 L	**1LA7 096–0AA . .**	1390/2860	3.40	4.5	1.9	1.9	4.9	5.3	2.0	2.1	13	0.0033	16
2	**2.4**	100 L	**1LA7 106–0AA . .**	1410/2870	4.25	5.5	1.8	1.8	5.0	5.5	2.0	2.1	13	0.0048	21
2.6	**3.1**		**1LA7 107–0AA . .**	1400/2850	5.50	7.6	2.3	2.4	5.6	5.6	2.4	2.4	13	0.0055	24
3.7	**4.4**	112 M	**1LA7 113–0AA . .**	1420/2885	8.00	10.5	2.0	2.2	5.6	5.8	2.2	2.3	13	0.011	31
4.7	**5.9**	132 S	**1LA7 130–0AA . .**	1450/2920	9.70	12.5	1.7	1.6	6.3	6.5	2.2	2.2	10	0.018	41
6.5	**8**	132 M	**1LA7 133–0AA . .**	1450/2930	13.6	16.7	2.0	2.1	6.9	7.5	2.5	2.6	10	0.023	50
9.3	**11.5**	160 M	**1LA7 163–0AA . .**	1455/2930	18.3	23.4	2.0	1.8	6.7	7.4	2.6	2.4	10	0.043	74
13	**17**	160 L	**1LA7 166–0AA . .**	1455/2930	25.6	32.0	2.5	2.8	7.6	8.5	3.0	3.0	10	0.060	92
15	**18**	180 M	**1LA5 183–0AA . .**	1470/2950	29.0	37.5	2.1	2.2	6.7	7.5	2.7	3.2	13	0.13	113
18	**21.5**	180 L	**1LA5 186–0AA . .**	1465/2950	34.5	42.0	2.0	2.2	6.4	7.3	2.6	3.1	13	0.15	123
26	**31**	200 L	**1LA5 207–0AA . .**	1465/2940	48.5	61.0	2.6	2.6	6.7	7.5	2.8	3.3	13	0.24	157
750 rpm	1500 rpm				750 rpm	1500 rpm	750 rpm	1500 rpm	750 rpm	1500 rpm	750 rpm	1500 rpm			
		750/1500 rpm, 8-/4-pole, 50 Hz, version with one winding in Dahlander circuit													
0.35	**0.5**	90 S	**1LA7 090–0AB . .**	675/1365	1.19	1.41	1.3	1.3	2.5	3.2	1.6	1.6	10	0.0023	11 13
0.5	**0.7**	90 L	**1LA7 096–0AB . .**	675/1380	1.60	2.10	1.4	1.5	3.0	3.5	1.7	1.8	10	0.0031	
0.7	**1.1**	100 L	**1LA7 106–0AB . .**	690/1380	2.10	3.25	1.7	1.6	3.3	3.5	2.0	1.9	10	0.0051	20
0.9	**1.5**		**1LA7 107–0AB . .**	680/1400	2.50	3.65	1.8	1.6	3.5	3.6	2.0	1.9	10	0.0063	22
1.4	**1.9**	112 M	**1LA7 113–0AB . .**	690/1410	4.00	5.20	1.4	1.5	3.6	4.4	1.7	1.8	10	0.013	25
1.8	**3.6**	132 S	**1LA7 130–0AB . .**	720/1430	6.30	7.20	2.0	1.3	4.3	5.4	2.3	1.8	10	0.018	41
2.5	**5**	132 M	**1LA7 133–0AB . .**	720/1430	8.20	10.0	2.0	1.3	4.3	5.4	2.3	1.8	10	0.023	49
3.5	**7**	160 M	**1LA7 163–0AB . .**	725/1450	11.7	13.9	2.0	1.4	4.0	5.4	2.3	1.8	10	0.043	73
5.6	**11**	160 L	**1LA7 166–0AB . .**	725/1450	18.5	21.15	2.2	1.7	4.2	5.9	2.4	2.0	10	0.060	91
11	**18**	180 L	**1LA5 186–0AB . .**	725/1455	27.0	35.0	1.9	2.0	5.2	6.2	2.2	2.2	13	0.21	123
17	**27**	200 L	**1LA5 207–0AB . .**	730/1465	40.5	50.5	2.4	2.3	5.4	6.6	2.5	2.5	13	0.37	157

Order No. supplements

Motor type	**Penultimate position: Voltage identifier**				**Final position: Type of construction identifier**						
	50 Hz, direct switch-on				IM B 3	Price supplement					
	230 V	400 V	500 V	690 V		IM B 5	IM V 1 Without protective cover	IM V 1 With protective cover	IM B 14 With standard flange	IM B 14 With special flange	IM B 35
1LA7 060 to 1LA7 166	**1**	**6**	**5**	**0**	**0**	**1**	**1**	**4**	**2**	**3**	**6**
1LA5 183 to 1LA5 207	**1**	**6**	**5**	**0**	**0**	**1**	**1**	**4**	**–**	**–**	**6**

Other voltage and/or frequency, voltage identifier **"9"**.
Order codes are required for this purpose (see "Technical information", "Voltages, currents and frequencies").

For other types of construction, see "Technical information", "Types of construction".

Selection and ordering data

Rated output 1500 rpm kW	Rated output 3000 rpm kW	Size	Order No. / Order No. supplement for voltage and type of construction, see table below	Operating data at rated output: Rated speed rpm	Rated current at 400 V 1500 rpm A	Rated current at 400 V 3000 rpm A	Starting torque (For direct-on-line starting as multiple of the rated torque) 1500 rpm	Starting torque 3000 rpm	Starting current (For direct-on-line starting as multiple of the rated current) 1500 rpm	Starting current 3000 rpm	Stalling torque 1500 rpm	Stalling torque 3000 rpm	Torque class KL	Moment of inertia J kg m²	Weight Type of constr. IM B 3 approx. kg
Two-speed pole-change for driving fans, IP55 degree of protection, temperature class F															
			1500/3000 rpm, 4-/2-pole, 50 Hz, version with one winding in Dahlander circuit												
0.15	**0.7**	80 M	**1LA7 080–0BA . .**	1400/2745	0.39	1.76	1.8	1.6	3.8	4.0	2.0	2.0	10	0.0014	10
0.25	**0.95**		**1LA7 083–0BA . .**	1385/2780	0.61	2.40	1.8	1.9	3.8	4.2	2.0	2.0	10	0.0017	11
0.33	**1.4**	90 S	**1LA7 090–0BA . .**	1420/2835	0.76	3.50	1.9	1.8	4.5	4.3	2.1	2.0	10	0.0024	13
0.5	**2**	90 L	**1LA7 096–0BA . .**	1420/2835	1.08	4.80	2.2	2.2	5.1	5.0	2.5	2.5	10	0.0033	16
0.65	**2.5**	100 L	**1LA7 106–0BA . .**	1430/2865	1.44	5.40	1.7	2.2	5.0	5.5	2.3	2.3	10	0.0048	21
0.8	**3.1**		**1LA7 107–0BA . .**	1425/2860	1.70	7.00	1.8	2.3	5.7	6.1	2.6	2.6	10	0.0055	24
1.1	**4.4**	112 M	**1LA7 113–0BA . .**	1445/2885	2.50	10.7	2.1	2.2	6.2	6.2	2.4	2.4	10	0.011	31
1.45	**5.9**	132 S	**1LA7 130–0BA . .**	1455/2920	3.00	12.8	2.0	2.1	6.8	6.5	2.8	2.8	10	0.018	41
2	**8**	132 M	**1LA7 133–0BA . .**	1455/2930	4.00	16.0	1.9	2.1	7.6	7.5	2.6	2.6	10	0.023	50
2.9	**11.5**	160 M	**1LA7 163–0BA . .**	1455/2930	5.70	22.0	1.8	1.8	6.9	7.4	2.5	2.4	10	0.043	74
4.3	**17**	160 L	**1LA7 166–0BA . .**	1455/2930	8.40	31.0	1.9	2.2	7.1	8.5	2.5	2.6	10	0.060	92
1000 rpm	1500 rpm				1000 rpm	1500 rpm	1000 rpm	1500 rpm	1000 rpm	1500 rpm	1000 rpm	1500 rpm			
			1000/1500 rpm, 6-/4-pole, 50 Hz, design with two windings												
0.12	**0.4**	80 M	**1LA7 080–1BD . .**	940/1430	0.51	1.38	1.7	1.7	2.8	4.0	1.8	2.0	10	0.0014	9
0.18	**0.55**		**1LA7 083–1BD . .**	930/1420	0.73	1.62	1.5	1.7	2.5	4.0	1.8	2.0	10	0.0017	10
0.29	**0.8**	90 S	**1LA7 090–1BD . .**	950/1430	1.07	2.10	1.5	1.5	3.4	4.3	2.0	2.0	10	0.0027	13 16
0.38	**1.1**	90 L	**1LA7 096–1BD . .**	955/1430	1.33	2.65	1.8	1.8	3.8	4.9	2.3	2.3	10	0.0033	
0.6	**1.7**	100 L	**1LA7 106–1BD . .**	950/1410	1.75	3.80	1.8	1.8	4.2	5.2	2.2	2.2	10	0.0049	21
0.75	**2.1**		**1LA7 107–1BD . .**	950/1420	2.30	4.55	1.6	1.9	3.9	5.2	2.0	2.2	10	0.0057	24
0.9	**3**	112 M	**1LA7 113–1BD . .**	980/1450	3.00	6.70	2.0	2.1	4.5	6.1	2.5	2.5	10	0.012	31
1.2	**3.9**	132 S	**1LA7 130–1BD . .**	975/1460	3.50	8.40	1.9	1.7	5.1	6.1	2.5	2.2	10	0.018	41
1.7	**5.4**	132 M	**1LA7 133–1BD . .**	975/1460	4.55	11.4	2.1	1.9	5.1	6.6	2.6	2.5	10	0.023	49
2.5	**7.2**	160 M	**1LA7 163–1BD . .**	980/1470	6.4	14.4	1.9	2.0	5.6	7.3	1.9	2.0	10	0.043	74
3.7	**12**	160 L	**1LA7 166–1BD . .**	980/1470	9.3	23.3	1.9	2.4	5.7	8.1	2.3	3.0	10	0.060	92
5.5	**16**	180 M	**1LA5 183–1BD . .**	965/1470	11.8	31.5	1.8	1.9	4.3	5.9	1.9	2.6	10	0.081	116
6.5	**19**	180 L	**1LA5 186–1BD . .**	965/1460	13.8	36.5	1.8	1.9	4.3	5.6	2.1	2.6	10	0.094	123
9.5	**26**	200 L	**1LA5 207–1BD . .**	980/1470	20.0	49.0	1.9	1.5	5.3	5.5	2.1	2.1	10	0.16	157
750 rpm	1500 rpm				750 rpm	1500 rpm	750 rpm	1500 rpm	750 rpm	1500 rpm	750 rpm	1500 rpm			
			750/1500 rpm, 8-/4-pole, 50 Hz, version with one winding in Dahlander circuit												
0.1	**0.5**	80 M	**1LA7 080–0BB . .**	680/1375	0.57	1.28	1.4	1.7	2.3	4.1	1.7	1.8	10	0.0014	9
0.15	**0.7**		**1LA7 083–0BB . .**	685/1380	0.77	1.76	1.4	1.8	2.4	4.2	1.7	1.8	10	0.0017	10
0.22	**1**	90 S	**1LA7 090–0BB . .**	695/1370	1.25	2.40	1.3	1.5	2.4	3.7	1.8	2.0	10	0.0024	13
0.33	**1.5**	90 L	**1LA7 096–0BB . .**	700/1375	1.80	3.30	1.5	1.8	2.6	4.2	1.8	2.0	10	0.0033	16
0.5	**2**	100 L	**1LA7 106–0BB . .**	710/1415	2.50	4.30	1.1	1.9	3.1	5.2	1.8	2.1	10	0.0047	21
0.65	**2.5**		**1LA7 107–0BB . .**	700/1400	2.80	5.30	1.1	1.9	3.1	5.4	1.8	2.1	10	0.0054	24
0.9	**3.6**	112 M	**1LA7 113–0BB . .**	720/1440	4.70	8.00	1.6	2.6	3.2	6.5	2.4	2.6	10	0.012	31
1.1	**4.7**	132 S	**1LA7 130–0BB . .**	720/1455	3.30	10.3	2.0	2.3	4.3	6.4	2.5	2.9	10	0.018	41
1.4	**6.4**	132 M	**1LA7 133–0BB . .**	720/1455	4.40	13.3	2.2	1.9	4.6	6.8	2.7	2.5	10	0.023	49
2.2	**9.5**	160 M	**1LA7 163–0BB . .**	725/1465	6.50	19.7	1.7	2.0	4.1	7.0	2.0	2.6	10	0.043	73
3.3	**14**	160 L	**1LA7 166–0BB . .**	730/1470	9.30	28.6	2.0	2.6	4.7	8.1	2.2	3.1	10	0.060	91
4.5	**16**	180 M	**1LA5 183–0BB . .**	730/1470	13.6	32.3	1.4	2.3	3.8	7.0	2.1	2.9	10	0.13	113
5	**18.5**	180 L	**1LA5 186–0BB . .**	730/1470	15.0	36.5	1.5	2.3	3.8	7.0	2.1	2.7	10	0.15	123
7.5	**28**	200 L	**1LA5 207–0BB . .**	732/1470	20.5	52.0	1.9	2.5	4.3	7.1	2.2	2.5	10	0.24	157

Higher outputs under "1LG · Cast iron housing" on Page 3/21.

Order No. supplements

Motor type	Penultimate position: Voltage identifier (50 Hz, direct switch-on) 230 V	400 V	500 V	690 V	Final position: Type of construction identifier IM B 3	Price supplement IM B 5	IM V 1 Without protective cover	IM V 1 With protective cover	IM B 14 With standard flange	IM B 14 With special flange	IM B 35
1LA7 080 to 1LA7 166	**1**	**6**	**5**	**0**	**0**	**1**	**1**	**4**	**2**	**3**	**6**
1LA5 183 to 1LA5 207	**1**	**6**	**5**	**0**	**0**	**1**	**1**	**4**	**–**	**–**	**6**

Other voltage and/or frequency, voltage identifier **"9"**.
Order codes are required for this purpose (see "Technical information", "Voltages, currents and frequencies").

For other types of construction, see "Technical information", "Types of construction".

Rated output 750 rpm	1000 rpm	1500 rpm	Size	Order No. / Order No. supplement for voltage and type of construction, see table below	Operating data at rated output: Rated speeds	Rated current at 400 V 750 rpm	1000 rpm	1500 rpm	Starting torque, For direct-on-line starting as multiple of the rated torque 750 rpm	1000 rpm	1500 rpm	Starting current, For direct-on-line starting as multiple of the rated current 750 rpm	1000 rpm	1500 rpm	Torque class	Moment of inertia J	Weight / Type of constr. IM B 3 approx.
kW	**kW**	**kW**			rpm	A	A	A							KL	kg m²	kg
Three-speed pole-change for driving fans, IP55 degree of protection, temperature class F																	
			750/1000/1500 rpm, 8-/6-/4-pole, 50 Hz, version with two windings, of which 750/1500 rpm in Dahlander circuit														
0.15	**0.22**	**0.7**	90 S	**1LA7 090–1BJ . .**	705/960/1430	0.72	0.82	1.74	1.3	1.3	1.5	2.5	2.9	4.3	10	0.0028	12
0.22	**0.3**	**0.95**	90 L	**1LA7 096–1BJ . .**	705/955/1435	1.06	1.13	2.30	1.3	1.3	1.4	2.5	3.1	4.0	10	0.0035	15
0.37	**0.55**	**1.5**	100 L	**1LA7 106–1BJ . .**	700/955/1400	1.66	1.71	3.25	0.9	1.4	1.5	2.8	3.8	4.7	7	0.0048	20
0.45	**0.7**	**1.8**		**1LA7 107–1BJ . .**	700/955/1400	1.85	2.15	3.90	0.9	1.4	1.7	2.8	3.8	4.7	7	0.0058	22
0.6	**0.85**	**2.4**	112 M	**1LA7 113–1BJ . .**	715/970/1445	2.75	2.80	5.10	1.1	1.3	1.9	3.1	4.4	6.0	7	0.011	29
0.75	**1.1**	**3.1**	132 S	**1LA7 130–1BJ . .**	730/980/1460	2.70	3.40	7.20	1.7	1.7	1.5	3.7	4.5	5.5	10	0.018	39
1	**1.5**	**4.4**	132 M	**1LA7 133–1BJ . .**	730/980/1460	3.55	4.50	9.70	1.8	1.9	1.6	3.9	4.9	5.8	10	0.024	46
1.6	**2.2**	**6.6**	160 M	**1LA7 163–1BJ . .**	730/980/1470	5.10	6.50	14.2	1.4	1.7	1.7	3.9	5.1	7.0	7	0.040	67
2.4	**3.5**	**10**	160 L	**1LA7 166–1BJ . .**	730/980/1470	7.60	9.40	20.7	1.6	1.8	2.0	4.1	5.3	7.7	7	0.054	85
3	**4.5**	**13**	180 M	**1LA5 183–1BJ . .**	730/980/1470	8.40	10.2	25.5	1.2	1.8	1.3	3.2	5.0	5.4	7	0.081	116
3.7	**5.5**	**16**	180 L	**1LA5 186–1BJ . .**	725/975/1469	10.3	12.1	31.0	1.1	1.9	1.3	3.2	5.0	5.4	7	0.094	123
5	**8**	**22**	200 L	**1LA5 207–1BJ . .**	730/975/1465	13.4	16.6	42.0	1.2	1.9	1.3	3.6	5.0	5.4	7	0.16	157

Order No. supplements

Motor type	Penultimate position: Voltage identifier, 50 Hz, direct switch-on: 230 V	400 V	500 V	690 V	Final position: Type of construction identifier: IM B 3	Price supplement: IM B 5	IM V 1 Without protective cover	IM V 1 With protective cover	IM B 14 With standard flange	IM B 14 With special flange	IM B 35
1LA7 090 to 1LA7 166	**1**	**6**	**5**	**0**	**0**	**1**	**1**	**4**	**2**	**3**	**6**
1LA5 183 to 1LA5 207	**1**	**6**	**5**	**0**	**0**	**1**	**1**	**4**	**–**	**–**	**6**

Other voltage and/or frequency, voltage identifier **"9"**.
Order codes are required for this purpose (see "Technical information", "Voltages, currents and frequencies").

For other types of construction, see "Technical information", "Types of construction".

Selection and ordering data

Rated output	Size	Order No. / Order No. supplement for voltage and type of construction, see table below	Efficiency class	Operating data at rated output: Rated speed	Efficiency η at 4/4-load	Efficiency η at 3/4-load	Power factor p.f.	Rated current at 400 V	Rated torque	Starting torque (For direct-on-line starting as multiple of the rated torque)	Starting current (as multiple of the rated current)	Stalling torque (as multiple of the rated torque)	Torque class	Moment of inertia J	Weight approx. (Type of constr. IM B 3)
kW			EFF2	rpm	%	%		A	Nm				KL	kg m²	kg
Energy-saving motor to CEMEP "Improved Efficiency" eff2, IP55 degree of protection, temperature class F (EFF2)															
	3000 rpm, 2-pole, 50 Hz														
3	100 L	**1LA6 106–2AA . .**	**2**	2890	84.0	84.0	0.85	6.1	9.9	2.8	6.8	3.0	16	0.0035	34
4	112 M	**1LA6 113–2AA . .**	**2**	2905	86.0	86.0	0.86	7.8	13	2.6	7.2	2.9	16	0.0059	43
5.5	132 S	**1LA6 130–2AA . .**	**2**	2925	86.5	86.5	0.89	10.4	18	2.0	5.9	2.8	16	0.015	53
7.5		**1LA6 131–2AA . .**	**2**	2930	88.0	88.0	0.89	13.8	24	2.3	6.9	3.0	16	0.019	58
11	160 M	**1LA6 163–2AA . .**	**2**	2940	89.5	89.5	0.88	20.0	36	2.1	6.5	2.9	16	0.034	96
15	160 M	**1LA6 164–2AA . .**	**2**	2940	90.0	90.2	0.90	26.5	49	2.2	6.6	3.0	16	0.043	105
18.5	160 L	**1LA6 166–2AA . .**	**2**	2940	91.0	91.2	0.91	32.0	60	2.4	7.0	3.1	16	0.051	115
22	180 M	**1LG4 183–2AA . .**	**2**	2945	91.6	91.6	0.86	40.5	71	2.5	6.4	3.4	16	0.068	145
30	200 L	**1LG4 206–2AA . .**	**2**	2950	91.8	91.9	0.88	54.0	97	2.3	6.5	3.0	16	0.13	205
37		**1LG4 207–2AA . .**	**2**	2955	92.9	93.2	0.89	65.0	120	2.5	7.2	3.3	16	0.15	225
45	225 M	**1LG4 223–2AA . .**	**2**	2960	93.6	93.9	0.88	79.0	145	2.4	6.7	3.1	16	0.22	285
55	250 M	**1LG4 253–2AB . .**	**2**	2970	93.6	93.8	0.88	96.0	177	2.1	6.7	3.1	13	0.40	375
75	280 S	**1LG4 280–2AB . .**	**2**	2975	94.5	94.3	0.88	130	241	2.5	7.5	3.1	13	0.72	500
90	280 M	**1LG4 283–2AB . .**	**2**	2975	95.1	95.2	0.89	154	289	2.6	7.2	3.1	13	0.83	540
110	315 S	**1LG4 310–2AB . .**		2982	94.6	93.8	0.88	190	352	2.4	7.2	3.1	13	1.2	720
132	315 M	**1LG4 313–2AB . .**		2982	95.1	94.8	0.90	225	423	2.4	6.9	3.0	13	1.4	775
160	315 L	**1LG4 316–2AB . .**		2982	95.5	95.3	0.91	265	512	2.4	7.0	3.0	13	1.6	900
200	315 L	**1LG4 317–2AB . .**		2982	95.9	95.8	0.92	325	641	2.3	6.7	2.9	13	2.1	1015
250	315	**1LA8 315–2AC . .**		2979	96.2	96.2	0.90	415	801	1.8	7.0	2.8	10	2.7	1300
315		**1LA8 317–2AC . .**		2979	96.6	96.6	0.91	520	1010	1.8	7.0	2.8	10	3.3	1500
355	355	**1LA8 353–2AC . .** ▲		2980	96.6	96.6	0.90	590	1140	1.7	6.5	2.5	10	4.8	1900
400		**1LA8 355–2AC . .** ▲		2980	96.7	96.7	0.91	660	1280	1.7	6.5	2.5	10	5.3	2000
500		**1LA8 357–2AC . .** ▲		2982	97.1	97.1	0.91	820	1600	1.8	6.5	2.6	10	6.4	2200
560	400	**1LA8 403–2AC . .** ▲		2985	97.1	97.1	0.91	910	1790	1.6	7.0	2.8	10	8.6	2800
630		**1LA8 405–2AC . .** ▲		2985	97.1	97.1	0.91	1020	2020	1.6	7.0	2.8	10	9.6	3000
710		**1LA8 407–2AC . .** ▲		2985	97.3	97.3	0.91	670 ● ■	2270	1.7	7.0	2.8	10	11	3200
800	450	**1LA8 453–2AE . .** ▲		2986	97.2	97.2	0.91	760 ●	2560	0.9	7.0	3.0	5	19	4000
900		**1LA8 455–2AE . .** ▲		2986	97.3	97.3	0.92	840 ●	2880	0.9	7.0	2.8	5	21	4200
1000		**1LA8 457–2AE . .** ▲		2986	97.4	97.4	0.93	920 ●	3200	0.9	7.0	2.7	5	23	4400

● Rated current at 690 V. ▲ With axial fan for clockwise rotation. ■ Also supplied for 400 VΔ (voltage identifier **"9"** and order code **L1Y**).

Order No. supplements

Motor type	Penultimate position: Voltage identifier, 50 Hz: 230 VΔ / 400 VY	400 VΔ / 690 VY	500 VY	500 VΔ	690 VΔ	60 Hz: 460 VY (Outputs at 60 Hz see "Technical information")	460 VΔ	Final position: Type of construction identifier: IM B 3	Price supplement: IM B 5	IM V 1 Without protective cover	IM V 1 With protective cover	IM B 14 With standard flange	IM B 14 With special flange	IM B 35
1LA6 106 to 1LA6 166	**1**	**6**	**3**	**5**	**–**	**1**	**6**	**0**	**1**	**1**	**4**	**2**	**3**	**6**
1LG4 183 to 1LG4 313	**1**	**6**	**3**	**5**	**–**	**1**	**6**	**0**	**1**	**1**	**4**	**–**	**–**	**6**
1LG4 316 to 1LG4 317	**–**	**6**	**–**	**5**	**–**	**–**	**6**	**0**	**–**	**8**	**4**	**–**	**–**	**6**
1LA8 315 to 1LA8 405	**–**	**6**	**–**	**5**	**–**	**–**	**9 L2F**	**0**	**–**	**8**	**4**	**–**	**–**	**6**
1LA8 407 to 1LA8 457	**–**	**–**	**–**	**5**	**0**	**–**	On request	**0**	**–**	**8**	**4**	**–**	**–**	**6**

Other voltage and/or frequency, voltage identifier **"9"**.
Order codes are required for this purpose (see "Technical information", "Voltages, currents and frequencies").

For possible 2-pole motors, see "Technical information", "Outputs at 60 Hz".

For other types of construction, see "Technical information", "Types of construction".

■ **Parallel supply cables required** (see "Technical information", "Connections, circuits and terminal blocks")

Voltage	1LG4 183	206	207	223	253	280	283	310	313	316	317	1LA8 315	317	353	355	357	403	405	407	453	455	457
230 V	■	■	■	■		■	■		■													
400 V											■	■	■	■	■	■	■	■				
500 V														■	■			■	■	■	■	■
690 V																					■	■

Rated output	Size	Order No. / Order No. supplement for voltage and type of construction, see table below	Efficiency class	Operating data at rated output: Rated speed	Efficiency η at 4/4-load	Efficiency η at 3/4-load	Power factor p.f.	Rated current at 400 V	Rated torque	Starting torque (For direct-on-line starting as multiple of the rated torque)	Starting current (as multiple of the rated current)	Stalling torque (as multiple of the rated torque)	Torque class	Moment of inertia J	Weight: Type of constr. IM B 3 approx.
kW			EFF2	rpm	%	%		A	Nm				KL	kg m²	kg
Energy-saving motor to CEMEP "Improved Efficiency" eff2, IP55 degree of protection, temperature class F (EFF2)															
	1500 rpm, 4-pole, 50 Hz														
2.2	100 L	**1LA6 106–4AA . .**	**2**	1420	82.0	82.5	0.82	4.7	15	2.5	5.6	2.8	16	0.0047	33
3		**1LA6 107–4AA . .**	**2**	1420	83.0	83.5	0.82	6.4	20	2.7	5.6	3.0	16	0.0055	36
4	112 M	**1LA6 113–4AA . .**	**2**	1440	85.0	85.5	0.83	8.2	27	2.7	6.0	3.0	16	0.012	45
5.5	132 S	**1LA6 130–4AA . .**	**2**	1455	86.0	86.0	0.81	11.4	36	2.5	6.3	3.1	16	0.018	55
7.5	132 M	**1LA6 133–4AA . .**	**2**	1455	87.0	87.5	0.82	15.2	49	2.7	6.7	3.2	16	0.023	62
11	160 M	**1LA6 163–4AA . .**	**2**	1460	88.5	89.0	0.84	21.5	72	2.2	6.2	2.7	16	0.043	100
15	160 L	**1LA6 166–4AA . .**	**2**	1460	90.0	90.2	0.84	28.5	98	2.6	6.5	3.0	16	0.055	114
18.5	180 M	**1LG4 183–4AA . .**	**2**	1465	90.4	90.8	0.84	35.0	121	2.4	6.7	3.1	16	0.099	140
22	180 L	**1LG4 186–4AA . .**	**2**	1465	91.0	91.5	0.84	41.5	143	2.5	6.9	3.2	16	0.12	155
30	200 L	**1LG4 207–4AA . .**	**2**	1465	91.6	92.0	0.85	56.0	196	2.5	6.7	3.4	16	0.19	205
37	225 S	**1LG4 220–4AA . .**	**2**	1475	92.2	92.6	0.85	68.0	240	2.5	6.7	3.1	16	0.37	265
45	225 M	**1LG4 223–4AA . .**	**2**	1475	93.1	93.6	0.86	81.0	291	2.7	7.2	3.2	16	0.45	300
55	250 M	**1LG4 253–4AA . .**	**2**	1480	93.5	93.8	0.85	100	355	2.4	6.1	2.8	16	0.69	390
75	280 S	**1LG4 280–4AA . .**	**2**	1485	94.2	94.1	0.85	136	482	2.5	7.1	3.0	16	1.2	535
90	280 M	**1LG4 283–4AA . .**	**2**	1485	94.6	94.6	0.86	160	579	2.5	7.4	3.0	16	1.4	580
110	315 S	**1LG4 310–4AA . .**		1488	94.6	94.6	0.85	198	706	2.5	6.4	2.8	16	1.9	730
132	315 M	**1LG4 313–4AA . .**		1488	95.2	95.2	0.85	235	847	2.7	6.8	2.9	16	2.3	810
160	315 L	**1LG4 316–4AA . .**		1486	95.7	95.8	0.86	280	1028	2.7	6.8	2.8	16	2.9	955
200	315 L	**1LG4 317–4AA . .**		1486	95.9	96.2	0.88	340	1285	2.6	6.5	2.8	16	3.5	1060
250	315	▲ **1LA8 315–4AB . .**		1488	96.0	96.0	0.88	425	1600	1.9	6.5	2.8	13	3.6	1300
315		▲ **1LA8 317–4AB . .**		1488	96.3	96.3	0.88	540	2020	2.0	6.8	2.8	13	4.4	1500
355	355	▲ **1LA8 353–4AB . .**		1488	96.3	96.3	0.87	610	2280	2.1	6.5	2.6	13	6.1	1900
400		▲ **1LA8 355–4AB . .**		1488	96.4	96.4	0.87	690	2570	2.1	6.5	2.6	13	6.8	2000
500		**1LA8 357–4AB . .**		1488	96.8	96.8	0.88	850	3210	2.1	6.5	2.4	13	8.5	2200
560	400	**1LA8 403–4AB . .**		1492	96.8	96.8	0.88	950	3580	1.9	6.5	2.7	13	13	2800
630		**1LA8 405–4AB . .**		1492	97.0	97.0	0.88	1060	4030	1.9	6.8	2.7	13	14	3000
710		**1LA8 407–4AB . .**		1492	97.0	97.0	0.89	690 ● ■	4540	1.9	6.8	2.7	13	16	3200
800	450	**1LA8 453–4AC . .**		1492	97.0	97.0	0.88	780 ● ■	5120	1.6	7.0	2.6	10	23	4000
900		**1LA8 455–4AC . .**		1492	97.1	97.1	0.88	880 ● ■	5760	1.6	7.0	2.6	10	26	4200
1000		**1LA8 457–4AC . .**		1492	97.1	97.1	0.89	970 ●	6400	1.7	7.0	2.6	10	28	4400

● Rated current at 690 V. ■ Also supplied for 400 VΔ (voltage identifier **"9"** and order code **L1Y**).

▲ **Standardline for 1LA8 motors** is a standard offer for certain designs and can be ordered with Order Code **B20**. It decreases the price by 10% for the basic machine. The delivery time is 4 weeks. Scope of supply for Standardline:
– 4-pole design
– Design designator 0 (IM B3)
– Available for operation with converter, but not in 690 V design
– Types 1LA8 315, 1LA8 317, 1LA8 353 and 1LA8 355
– Voltage distinctive number 6 (400 VΔ/690 VY) or 5 (500 VΔ)
Available Order No.: A12, A23, A61, A72, H70, H73, K09, K10, K45, L97, L98 and L27

Order No. supplements

Motor type	Penultimate position: Voltage identifier, 50 Hz: 230 VΔ / 400 VY	400 VΔ / 690 VY	500 VY	500 VΔ	690 VΔ	60 Hz: 460 VY (Outputs at 60 Hz see "Technical information")	460 VΔ	Final position: Type of construction identifier, IM B 3	Price supplement: IM B 5	IM V 1 Without protective cover	IM V 1 With protective cover	IM B 14 With standard flange	IM B 14 With special flange	IM B 35
1LA6 106 to 1LA6 166	**1**	**6**	**3**	**5**	**–**	**1**	**6**	**0**	**1**	**1**	**4**	**2**	**3**	**6**
1LG4 183 to 1LG4 313	**1**	**6**	**3**	**5**	**–**	**1**	**6**	**0**	**1**	**1**	**4**	**–**	**–**	**6**
1LG4 316 to 1LG4 317	**–**	**6**	**–**	**5**	**–**	**–**	**6**	**0**	**–**	**8**	**4**	**–**	**–**	**6**
1LA8 315 to 1LA8 405	**–**	**6**	**–**	**5**	**–**	**–**	**9 L2F**	**0**	**–**	**8**	**4**	**–**	**–**	**6**
1LA8 407 to 1LA8 457	**–**	**–**	**–**	**5**	**0**	**–**	On request	**0**	**–**	**8**	**4**	**–**	**–**	**6**

Other voltage and/or frequency, voltage identifier **"9"**.
Order codes are required for this purpose (see "Technical information", "Voltages, currents and frequencies").

For other types of construction, see "Technical information", "Types of construction".

■ **Parallel supply cables required** (see "Technical information", "Connections, circuits and terminal blocks")

Voltage	1LG4 183	186	207	220	223	253	280	283	310	313	316	317	1LA8 315	317	353	355	357	403	405	407	453	455	457
230 V	■	■	■	■	■		■	■	■	■													
400 V												■	■	■	■	■	■	■	■				
500 V															■	■			■	■	■	■	■
690 V																						■	■

Selection and ordering data

Rated output	Size	Order No. / Order No. supplement for voltage and type of construction, see table below	Operating data at rated output: Rated speed	Efficiency η at 4/4-load	Efficiency η at 3/4-load	Power factor p.f.	Rated current at 400 V	Rated torque	Starting torque (For direct-on-line starting as multiple of the rated torque)	Starting current (as multiple of the rated current)	Stalling torque (as multiple of the rated torque)	Torque class	Moment of inertia J	Weight: Type of constr. IM B 3 approx.
kW			rpm	%	%		A	Nm				KL	kg m²	kg
Energy-saving motor, IP55 degree of protection, temperature class F														
	1000 rpm, 6-pole, 50 Hz													
1.5	100 L	**1LA6 106–6AA . .**	925	74.0	74.0	0.75	3.9	15	2.3	4.0	2.3	16	0.0047	33
2.2	112 M	**1LA6 113–6AA . .**	940	78.0	78.5	0.78	5.2	22	2.2	4.6	2.5	16	0.0091	40
3	132 S	**1LA6 130–6AA . .**	950	79.0	79.5	0.76	7.2	30	1.9	4.2	2.2	16	0.015	50
4	132 M	**1LA6 133–6AA . .**	950	80.5	80.5	0.76	9.4	40	2.1	4.5	2.4	16	0.019	57
5.5	132 M	**1LA6 134–6AA . .**	950	83.0	83.0	0.76	12.6	55	2.3	5.0	2.6	16	0.025	66
7.5	160 M	**1LA6 163–6AA . .**	960	86.0	86.0	0.74	17.0	75	2.1	4.6	2.5	16	0.044	103
11	160 L	**1LA6 166–6AA . .**	960	87.5	87.5	0.74	24.5	109	2.3	4.8	2.6	16	0.063	122
15	180 L	**1LG4 186–6AA . .**	965	88.9	90.3	0.83	29.5	148	2.3	5.3	2.5	16	0.18	150
18.5	200 L	**1LG4 206–6AA . .**	975	89.8	90.2	0.81	36.5	181	2.5	5.6	2.5	16	0.24	195
22		**1LG4 207–6AA . .**	975	90.3	91.0	0.81	43.5	215	2.6	5.7	2.5	16	0.29	205
30	225 M	**1LG4 223–6AA . .**	978	91.8	92.8	0.83	57.0	293	2.7	5.6	2.5	16	0.49	280
37	250 M	**1LG4 253–6AA . .**	980	92.3	93.0	0.83	70.0	361	2.7	6.0	2.3	16	0.76	370
45	280 S	**1LG4 280–6AA . .**	985	92.4	93.1	0.85	83.0	436	2.4	6.1	2.4	16	1.10	475
55	280 M	**1LG4 283–6AA . .**	985	92.7	93.3	0.86	100	533	2.5	6.3	2.5	16	1.40	510
75	315 S	**1LG4 310–6AA . .**	988	93.5	93.7	0.84	138	725	2.5	6.5	2.8	16	2.1	685
90	315 M	**1LG4 313–6AA . .**	988	93.9	94.2	0.84	164	870	2.6	6.8	2.9	16	2.5	750
110	315 L	**1LG4 316–6AA . .**	988	94.3	94.6	0.86	196	1063	2.5	6.8	2.9	16	3.2	890
132	315 L	**1LG4 317–6AA . .**	988	94.8	95.0	0.86	235	1276	3.1	7.3	3.0	16	4.0	980
160	315 L	**1LG4 318–6AA . .**	988	95.0	95.1	0.86	285	1547	3.0	7.5	3.0	16	4.7	1180
200	315	**1LA8 315–6AB . .**	989	95.7	95.8	0.86	345	1930	2.0	6.3	2.5	13	6.0	1300
250		**1LA8 317–6AB . .**	989	95.9	96.0	0.86	430	2410	2.0	6.3	2.5	13	7.3	1500
315	355	**1LA8 355–6AB . .**	993	96.2	96.2	0.86	540	3030	2.2	6.5	2.8	13	13	2000
400		**1LA8 357–6AB . .**	993	96.5	96.5	0.86	690	3850	2.2	6.5	2.8	13	16	2200
450	400	**1LA8 403–6AB . .**	992	96.5	96.5	0.86	780	4330	2.2	6.5	2.8	13	21	2800
500		**1LA8 405–6AB . .**	992	96.5	96.5	0.86	860	4810	2.3	6.5	2.8	13	24	3000
560		**1LA8 407–6AB . .**	992	96.7	96.7	0.86	960	5390	2.3	6.5	2.8	13	27	3200
630	450	**1LA8 453–6AB . .**	993	96.8	96.8	0.86	1100	6060	2.0	6.5	2.6	13	35	4000
710		**1LA8 455–6AB . .**	993	96.8	96.8	0.86	710 ● ■	6830	2.0	6.5	2.5	13	39	4200
800		**1LA8 457–6AB . .**	993	97.0	97.1	0.86	790 ● ■	7690	2.0	6.5	2.5	13	44	4500

● Rated current at 690 V. ■ Also supplied for 400 VΔ (voltage identifier **"9"** and order code **L1Y**).

Order No. supplements

Motor type	Penultimate position: Voltage identifier, 50 Hz: 230 VΔ / 400 VY	400 VΔ / 690 VY	500 VY	500 VΔ	690 VΔ	60 Hz: 460 VY (Outputs at 60 Hz see "Technical information")	460 VΔ	Final position: Type of construction identifier: IM B 3	IM B 5	IM V 1 Without protective cover	IM V 1 With protective cover	IM B 14 With standard flange	IM B 14 With special flange	IM B 35
1LA6 106 to 1LA6 166	**1**	**6**	**3**	**5**	**–**	**1**	**6**	**0**	**1**	**1**	**4**	**2**	**3**	**6**
1LG4 183 to 1LG4 313	**1**	**6**	**3**	**5**	**–**	**1**	**6**	**0**	**1**	**1**	**4**	**–**	**–**	**6**
1LG4 316 to 1LG4 318	**–**	**6**	**–**	**5**	**–**	**–**	**6**	**0**	**–**	**8**	**4**	**–**	**–**	**6**
1LA8 315 to 1LA8 453	**–**	**6**	**–**	**5**	**–**	**–**	**9 L2F**	**0**	**–**	**8**	**4**	**–**	**–**	**6**
1LA8 455 to 1LA8 457	**–**	**–**	**–**	**5**	**0**	**–**	On request	**0**	**–**	**8**	**4**	**–**	**–**	**6**

Other voltage and/or frequency, voltage identifier **"9"**.
Order codes are required for this purpose (see "Technical information", "Voltages, currents and frequencies").

For other types of construction, see "Technical information", "Types of construction".

■ **Parallel supply cables required** (see "Technical information", "Connections, circuits and terminal blocks")

Voltage	1LG4 186	206	207	223	253	280	283	310	313	316	317	318	1LA8 315	317	355	357	403	405	407	453	455	457
230 V				■																		
400 V														■	■	■		■	■	■		
500 V																■				■	■	■

Rated output	Size	Order No.	Operating data at rated output						Starting torque	Starting current	Stalling torque	Torque class	Moment of inertia	Weight
		Order No. supplement for voltage and type of construction, see table below	Rated speed	Efficiency η at 4/4-load	Efficiency η at 3/4-load	Power factor p.f.	Rated current at 400 V	Rated torque	For direct-on-line starting as multiple of the rated torque	current	torque		J	Type of constr. IM B 3 approx.
kW			rpm	%	%		A	Nm				KL	kg m²	kg
Energy-saving motor, IP55 degree of protection, temperature class F														
	750 rpm, 8-pole, 50 Hz													
0.75	100 L	**1LA6 106–8AB . .**	680	66.0	65.0	0.76	2.15	11	1.6	3.0	1.9	13	0.0051	29
1.1		**1LA6 107–8AB . .**	680	72.0	72.0	0.76	2.90	15	1.8	3.3	2.1	13	0.0063	32
1.5	112 M	**1LA6 113–8AB . .**	705	74.0	74.0	0.76	3.85	20	1.8	3.7	2.1	13	0.013	39
2.2	132 S	**1LA6 130–8AB . .**	700	75.0	75.0	0.74	5.70	30	1.9	3.9	2.3	13	0.014	50
3	132 M	**1LA6 133–8AB . .**	700	77.0	77.5	0.74	7.60	41	2.1	4.1	2.4	13	0.019	57
4	160 M	**1LA6 163–8AB . .**	715	80.0	80.0	0.72	10.0	53	2.2	4.5	2.6	13	0.036	91
5.5	160 M	**1LA6 164–8AB . .**	710	83.5	83.5	0.73	13.0	74	2.3	4.7	2.7	13	0.046	102
7.5	160 L	**1LA6 166–8AB . .**	715	85.5	85.5	0.72	17.6	100	2.7	5.3	3.0	13	0.064	122
11	180 L	**1LG4 186–8AB . .**	725	87.5	88.3	0.73	25.0	145	1.7	4.2	2.1	13	0.17	150
15	200 L	**1LG4 207–8AB . .**	725	87.7	88.4	0.76	32.5	198	2.2	4.9	2.6	13	0.29	205
18.5	225 S	**1LG4 220–8AB . .**	730	89.4	90.4	0.78	38.5	242	2.3	5.5	2.7	13	0.48	270
22	225 M	**1LG4 223–8AB . .**	730	89.7	90.7	0.79	45.0	288	2.3	5.6	2.8	13	0.55	290
30	250 M	**1LG4 253–8AB . .**	730	91.4	92.2	0.81	58.0	392	2.3	5.5	2.6	13	0.84	385
37	280 S	**1LG4 280–8AB . .**	735	92.0	92.8	0.81	72.0	481	2.2	5.0	2.1	13	1.11	475
45	280 M	**1LG4 283–8AB . .**	735	92.4	93.3	0.81	87.0	585	2.2	5.1	2.1	13	1.40	515
55	315 S	**1LG4 310–8AB . .**	740	93.0	93.4	0.81	106	710	2.2	5.8	2.6	13	2.1	680
75	315 M	**1LG4 313–8AB . .**	738	93.3	94.0	0.83	140	971	2.2	5.7	2.6	13	2.5	745
90	315 L	**1LG4 316–8AB . .**	738	93.4	94.0	0.83	168	1165	2.2	5.8	2.7	13	3.1	865
110	315 L	**1LG4 317–8AB . .**	738	94.0	94.4	0.83	205	1423	2.4	6.1	2.8	13	3.9	1020
132	315 L	**1LG4 318–8AB . .**	738	94.2	94.6	0.83	245	1708	2.5	6.5	2.9	13	4.5	1100
160	315	**1LA8 315–8AB . .**	739	94.9	95.1	0.82	295	2070	2.1	6.0	2.3	13	6.0	1300
200		**1LA8 317–8AB . .**	739	95.2	95.6	0.82	370	2580	2.1	6.0	2.3	13	7.3	1500
250	355	**1LA8 355–8AB . .**	741	95.7	96.0	0.82	460	3220	2.1	6.1	2.4	13	13	2000
315		**1LA8 357–8AB . .**	741	96.0	96.0	0.82	580	4060	2.1	6.1	2.4	13	16	2200
355	400	**1LA8 403–8AB . .**	742	96.1	96.2	0.82	650	4570	2.0	6.5	2.6	13	21	2800
400		**1LA8 405–8AB . .**	742	96.2	96.4	0.82	730	5150	2.1	6.5	2.6	13	24	3000
450		**1LA8 407–8AB . .**	742	96.3	96.3	0.82	820	5790	2.1	6.5	2.6	13	27	3200
500	450	**1LA8 453–8AB . .**	744	96.4	96.4	0.81	920	6420	2.0	6.6	2.4	13	35	4000
560		**1LA8 455–8AB . .**	744	96.5	96.4	0.81	1040	7190	2.0	6.6	2.4	13	39	4200
630		**1LA8 457–8AB . .**	744	96.6	96.6	0.81	1160	8090	2.0	6.6	2.4	13	44	4500

Order No. supplements

Motor type	Penultimate position: Voltage identifier							Final position: Type of construction identifier						
	50 Hz					60 Hz		IM B 3	Price supplement					
	230 VΔ / 400 VY	400 VΔ / 690 VY	500 VY	500 VΔ	690 VΔ	460 VY (Outputs at 60 Hz see "Technical information")	460 VΔ		IM B 5	IM V 1 Without protective cover	IM V 1 With protective cover	IM B 14 With standard flange	IM B 14 With special flange	IM B 35
1LA6 106 to 1LA6 166	**1**	**6**	**3**	**5**	**–**	**1**	**6**	**0**	**1**	**1**	**4**	**2**	**3**	**6**
1LG4 183 to 1LG4 313	**1**	**6**	**3**	**5**	**–**	**1**	**6**	**0**	**1**	**1**	**4**	**–**	**–**	**6**
1LG4 316 to 1LG4 318	**–**	**6**	**–**	**5**	**–**	**–**	**6**	**0**	**–**	**8**	**4**	**–**	**–**	**6**
1LA8 315 to 1LA8 457	**–**	**6**	**–**	**5**	**–**	**–**	**9 L2F**	**0**	**–**	**8**	**4**	**–**	**–**	**6**

Other voltage and/or frequency, voltage identifier **"9"**.
Order codes are required for this purpose (see "Technical information", "Voltages, currents and frequencies").

For other types of construction, see "Technical information", "Types of construction".

■ **Parallel supply cables required** (see "Technical information", "Connections, circuits and terminal blocks")

Voltage	1LA8 315	317	355	357	403	405	407	453	455	457
400 V				■			■	■	■	■
500 V									■	■

Selection and ordering data

■ 50 Hz

The motors can also be used for 60 Hz according to EPACT, see Pages 3/18 and 3/19.

For further details, see "Technical information", "Motors for the US market".

3

Rated output	Size	Order No. / Order No. supplement for voltage and type of construction, see table below	Efficiency class	Operating data at rated output: Rated speed	Efficiency η at 4/4-load	Efficiency η at 3/4-load	Power factor p.f.	Rated current at 400 V	Rated torque	Starting torque (For direct-on-line starting as multiple of the rated torque)	Starting current (multiple of the rated current)	Stalling torque (multiple of the rated torque)	Torque class	Moment of inertia J	Weight, Type of constr. IM B 3 approx.
kW			EFF I	rpm	%	%		A	Nm				KL	kg m²	kg
Energy-saving motor to CEMEP "High Efficiency" eff1, IP55 degree of protection, temperature class F															EFF I
	3000 rpm, 2-pole, 50 Hz														
22	180 M	**1LG6 183–2AA . .**	**1**	2955	94.1	94.5	0.88	38.5 [1]	71	2.5	7.2	3.4	16	0.086	180
30	200 L	**1LG6 206–2AA . .**	**1**	2960	93.5	93.4	0.88	53.0 [1]	97	2.4	7.0	3.3	16	0.15	225
37		**1LG6 207–2AA . .**	**1**	2960	94.1	94.0	0.89	64.0 [1]	119	2.5	7.2	3.3	16	0.18	255
45	225 M	**1LG6 223–2AA . .**	**1**	2965	94.9	95.1	0.89	77.0 [1]	145	2.5	7.3	3.2	16	0.27	330
55	250 M	**1LG6 253–2AA . .**	**1**	2975	95.3	95.3	0.90	93.0	177	2.4	6.8	3.0	16	0.47	420
75	280 S	**1LG6 280–2AB . .**	**1**	2975	95.2	95.2	0.89	128 [1]	241	2.5	7.0	3.0	13	0.83	530
90	280 M	**1LG6 283–2AB . .**	**1**	2978	95.6	95.7	0.90	150 [1]	289	2.6	7.6	3.1	13	1.0	615
110	315 S	**1LG6 310–2AB . .**		2982	95.8	95.7	0.91	182 [1]	352	2.4	6.9	2.8	13	1.4	790
132	315 M	**1LG6 313–2AB . .**		2982	96.0	95.9	0.91	220 [1]	423	2.6	7.1	2.9	13	1.6	915
160	315 L	**1LG6 316–2AB . .**		2982	96.4	96.4	0.92	260	512	2.5	7.1	2.9	13	2.1	1055
200	315 L	**1LG6 317–2AB . .**		2982	96.5	96.5	0.93	320	641	2.5	6.9	2.8	13	2.5	1245
	1500 rpm, 4-pole, 50 Hz														
18.5	180 M	**1LG6 183–4AA . .**	**1**	1470	92.6	93.2	0.83	34.5 [1]	120	2.5	6.4	3.0	16	0.12	155
22	180 L	**1LG6 186–4AA . .**	**1**	1470	93.2	93.5	0.84	40.5 [1]	143	2.5	6.7	3.1	16	0.14	180
30	200 L	**1LG6 207–4AA . .**	**1**	1470	93.3	93.4	0.85	55.0 [1]	195	2.6	6.7	3.3	16	0.23	225
37	225 S	**1LG6 220–4AA . .**	**1**	1480	94.0	94.4	0.85	67.0 [1]	239	2.7	6.8	3.0	16	0.40	290
45	225 M	**1LG6 223–4AA . .**	**1**	1480	94.5	94.7	0.85	81.0 [1]	290	2.8	6.9	3.0	16	0.49	330
55	250 M	**1LG6 253–4AA . .**	**1**	1485	95.1	95.3	0.87	96.0	354	2.6	7.5	3.0	16	0.86	460
75	280 S	**1LG6 280–4AA . .**	**1**	1485	95.1	95.2	0.87	130 [1]	482	2.5	6.8	2.9	16	1.40	575
90	280 M	**1LG6 283–4AA . .**	**1**	1486	95.4	95.5	0.86	158 [1]	578	2.7	7.5	3.1	16	1.70	675
110	315 S	**1LG6 310–4AA . .**		1488	95.9	96.0	0.87	190 [1]	706	2.7	7.1	2.9	16	2.3	810
132	315 M	**1LG6 313–4AA . .**		1488	96.1	96.2	0.88	225 [1]	847	2.7	7.3	2.9	16	2.9	965
160	315 L	**1LG6 316–4AA . .**		1490	96.3	96.4	0.88	275	1026	3.0	7.4	3.0	16	3.5	1105
200	315 L	**1LG6 317–4AA . .**		1490	96.4	96.5	0.88	340	1282	3.2	7.6	3.0	16	4.2	1305

Order No. supplements

Motor type	Penultimate position: Voltage identifier, 50 Hz: 230 VΔ / 400 VY	400 VΔ / 690 VY	500 VY	500 VΔ	60 Hz: 460 VY	460 VΔ	Final position: Type of construction identifier: IM B 3	Price supplement: IM B 5	IM V 1 Without protective cover	IM V 1 With protective cover	IM B 35
1LG6 183 to 1LG6 313	**1**	**6**	**3**	**5**	1	6	**0**	**1**	**1**	**4**	**6**
1LG6 316 to 1LG6 317	**–**	**6**	**–**	**5**	–	6	**0**	**–**	**8**	**4**	**6**

Other voltage and/or frequency, voltage identifier **"9"**.
Order codes are required for this purpose (see "Technical information", "Voltages, currents and frequencies").

For other types of construction, see "Technical information", "Types of construction".

1) For connection to 230 V, parallel supply cables are required (see "Technical information", "Connections, circuits and terminal blocks").

Rated output	Size	Order No. / Order No. supplement for voltage and type of construction, see table below	Operating data at rated output: Rated speed	Efficiency η at 4/4-load	Efficiency η at 3/4-load	Power factor p.f.	Rated current at 400 V	Rated torque	Starting torque (For direct-on-line starting as multiple of the rated torque)	Starting current (as multiple of the rated current)	Stalling torque (as multiple of the rated torque)	Torque class	Moment of inertia J	Weight / Type of constr. IM B 3 approx.
kW			rpm	%	%		A	Nm				KL	kg m²	kg
Energy-saving motor, IP55 degree of protection, temperature class F														
	1000 rpm, 6-pole, 50 Hz													
15	180 L	**1LG6 186–6AA . .**	975	90.9	91.7	0.81	29.5	147	2.4	5.5	2.5	16	0.20	175
18.5	200 L	**1LG6 206–6AA . .**	978	91.2	91.8	0.81	36.0	181	2.4	5.6	2.4	16	0.29	210
22		**1LG6 207–6AA . .**	978	91.9	92.5	0.82	42.0	215	2.4	5.6	2.4	16	0.36	240
30	225 M	**1LG6 223–6AA . .**	980	93.2	93.7	0.83	56.0 [1])	292	2.8	6.5	2.9	16	0.63	325
37	250 M	**1LG6 253–6AA . .**	985	93.7	94.1	0.83	69.0	359	2.9	6.8	2.5	16	0.93	405
45	280 S	**1LG6 280–6AA . .**	988	94.4	94.6	0.85	81.0	435	3.0	6.8	2.7	16	1.40	520
55	280 M	**1LG6 283–6AA . .**	988	94.6	94.8	0.85	99.0	532	3.3	7.3	2.9	16	1.60	570
75	315 S	**1LG6 310–6AA . .**	990	95.0	95.0	0.83	138	723	2.8	7.3	3.0	16	2.5	760
90	315 M	**1LG6 313–6AA . .**	990	95.3	95.4	0.85	160	868	2.7	7.3	2.9	16	3.2	935
110	315 L	**1LG6 316–6AA . .**	990	95.6	95.7	0.85	196	1061	2.9	7.4	2.9	16	4.0	1010
132	315 L	**1LG6 317–6AA . .**	990	95.8	95.8	0.85	235	1273	3.1	7.8	3.1	16	4.7	1180
160	315 L	**1LG6 318–6AA . .**	990	95.8	95.9	0.86	280	1543	3.2	7.8	3.1	16	5.4	1245
	750 rpm, 8-pole, 50 Hz													
11	180 L	**1LG6 186–8AB . .**	725	88.7	89.6	0.76	23.5	145	1.9	4.6	2.2	13	0.210	165
15	200 L	**1LG6 207–8AB . .**	725	89.3	89.8	0.80	30.5	198	2.3	5.3	2.6	13	0.370	235
18.5	225 S	**1LG6 220–8AB . .**	730	91.1	91.8	0.81	36.0	242	2.3	5.6	2.6	13	0.550	295
22	225 M	**1LG6 223–8AB . .**	730	91.6	92.1	0.81	43.0	288	2.4	5.8	2.8	13	0.660	335
30	250 M	**1LG6 253–8AB . .**	735	92.8	93.3	0.82	57.0	390	2.5	6.0	2.8	13	1.10	435
37	280 S	**1LG6 280–8AB . .**	738	93.1	93.3	0.81	71.0	479	2.3	5.7	2.3	13	1.40	510
45	280 M	**1LG6 283–8AB . .**	738	93.7	94.0	0.81	86.0	582	2.6	6.1	2.5	13	1.60	560
55	315 S	**1LG6 310–8AB . .**	740	94.3	94.4	0.82	102	710	2.5	6.3	2.9	13	2.5	750
75	315 M	**1LG6 313–8AB . .**	740	94.5	94.7	0.83	138	968	2.5	6.7	2.9	13	3.1	840
90	315 L	**1LG6 316–8AB . .**	740	94.7	95.1	0.84	164	1161	2.4	6.3	2.8	13	3.9	1005
110	315 L	**1LG6 317–8AB . .**	740	94.8	95.1	0.84	200	1420	2.4	6.4	2.6	13	4.5	1100
132	315 L	**1LG6 318–8AB . .**	740	94.9	95.2	0.84	240	1704	2.5	6.7	2.9	13	5.3	1270

Order No. supplements

Motor type	Penultimate position: Voltage identifier, 50 Hz: 230 VΔ / 400 VY	400 VΔ / 690 VY	500 VY	500 VΔ	60 Hz: 460 VY	460 V	Final position: Type of construction identifier: IM B 3	Price supplement: IM B 5	IM V 1 Without protective cover	IM V 1 With protective cover	IM B 35
1LG6 186 to 1LG6 313	**1**	**6**	**3**	**5**	1	6	**0**	**1**	**1**	**4**	**6**
1LG6 316 to 1LG6 318	**–**	**6**	**–**	**5**	–	6	**0**	**–**	**8**	**4**	**6**

Other voltage and/or frequency, voltage identifier **"9"**.
Order codes are required for this purpose (see "Technical information", "Voltages, currents and frequencies").

For other types of construction, see "Technical information", "Types of construction".

1) For connection to 230 V, parallel supply cables are required (see "Technical information", "Connections, circuits and terminal blocks").

Selection and ordering data

■ 60 Hz

The motors can also be used for 50 Hz "High Efficiency" eff1, see Pages 3/16 and 3/17.

For further details, see "Technical information", "Motors for the US market".

3

Rated output	Size	Order No.	Operating data at rated output					Starting torque	Starting current	Stalling torque	Torque class	Moment of inertia	Weight
		Order No. supplement for voltage and type of construction, see table below	Rated speed	Nominal efficiency level η	Power factor p.f.	Rated current at 460 V	Rated torque	For direct-on-line starting as multiple of the rated				J	Type of constr. IM B 3 approx.
								torque	current	torque			
HP			rpm	%		A	Nm				KL	kg m²	kg
Energy-saving motors according to EPACT, IP55 degree of protection													**CC 032A**
	3600 rpm, 2-pole, 60 Hz												
30 ●	180 M	**1LG6 183–2AA . .**	3560	93.6	0.88	34	60	2.7	7.9	3.7	16	0.086	180
40 ●	200 L	**1LG6 206–2AA . .**	3565	92.4	0.88	46	80	2.7	7.8	3.7	16	0.151	225
50 ●		**1LG6 207–2AA . .**	3565	92.4	0.89	57	100	2.8	7.8	3.7	16	0.182	255
60 ●	225 M	**1LG6 223–2AA . .**	3570	94.1	0.89	67	120	2.8	8.3	3.6	16	0.266	330
75 ●		**1LG6 228–2AA . .** [1]	3570	94.1	0.90	83	150	3.3	8.7	3.7	16	0.319	390
75	250 M	**1LG6 253–2AA . .**	3578	93.6	0.89	84	149	2.7	7.5	3.2	16	0.466	420
100 ●		**1LG6 258–2AA . .** [1]	3580	94.1	0.89	112	199	2.8	8.4	3.5	16	0.565	470
100	280 S	**1LG6 280–2AB . .**	3580	95.0	0.89	110	199	2.8	7.9	3.4	13	0.832	530
125 ●	280 M	**1LG6 283–2AB . .**	3580	95.0	0.90	136	249	2.9	8.3	3.4	13	1.00	615
150 ●		**1LG6 288–2AA . .** [1]	3580	95.0	0.90	164	299	3.1	8.5	3.6	16	1.160	660
150 ●	315 S	**1LG6 310–2AB . .**	3585	94.5	0.91	164	298	2.6	7.5	3.1	13	1.39	790
175 ●	315 M	**1LG6 313–2AB . .**	3586	95.0	0.91	190	348	3.0	8.3	3.3	13	1.62	915
200 ●	315 L	**1LG6 316–2AB . .**	3588	95.4	0.91	215	397	3.0	8.4	3.5	13	2.09	1055
250	315 L	**1LG6 317–2AB . .**	3588	95.4	0.93	265	496	3.2	8.6	3.4	13	2.46	1245
300	315 L	**1LG6 318–2AA . .** [1]	3591	95.4	0.92	320	595	4.1	10.0	3.9	16	2.74	1330
	1800 rpm, 4-pole, 60 Hz												
25 ●	180 M	**1LG6 183–4AA . .**	1775	92.4	0.82	31	100	2.9	7.1	3.3	16	0.122	155
30 ●	180 L	**1LG6 186–4AA . .**	1775	92.4	0.83	36.5	121	2.8	7.4	3.4	16	0.144	180
40 ●	200 L	**1LG6 207–4AA . .**	1775	93.0	0.84	48	160	3.0	7.7	3.7	16	0.234	225
50	225 S	**1LG6 220–4AA . .**	1785	93.6	0.84	60	200	3.1	7.5	3.4	16	0.398	290
60 ●	225 M	**1LG6 223–4AA . .**	1785	94.1	0.85	70	240	3.3	7.9	3.5	16	0.486	330
75 ●		**1LG6 228–4AA . .** [1]	1785	94.1	0.85	88	299	3.0	7.8	3.3	16	0.660	355
75	250 M	**1LG6 253–4AA . .**	1790	94.5	0.86	86	298	2.9	8.2	3.4	16	0.856	460
100 ●		**1LG6 258–4AA . .** [1]	1788	94.5	0.86	116	398	3.0	8.1	3.3	16	0.990	495
100	280 S	**1LG6 280–4AA . .**	1788	95.0	0.86	114	398	2.9	7.6	3.2	16	1.39	575
125 ●	280 M	**1LG6 283–4AA . .**	1790	95.0	0.86	144	497	3.0	8.2	3.4	16	1.71	675
150 ●		**1LG6 288–4AA . .** [1]	1788	95.0	0.86	172	598	3.1	8.4	3.5	16	1.88	710
150 ●	315 S	**1LG6 310–4AA . .**	1791	95.0	0.87	170	597	3.1	7.8	3.2	16	2.31	810
175 ●	315 M	**1LG6 313–4AA . .**	1791	95.4	0.87	198	696	3.2	8.4	3.3	16	2.88	965
200 ●	315 L	**1LG6 316–4AA . .**	1792	95.4	0.87	225	795	3.7	9.0	3.6	16	3.46	1105
250	315 L	**1LG6 317–4AA . .**	1792	95.8	0.87	280	994	4.0	9.1	3.7	16	4.22	1305
300	315 L	**1LG6 318–4AA . .** [1]	1792	95.8	0.87	335	1193	4.0	9.3	3.7	16	4.50	1345

● With CC No. CC 032A

Order No. supplements

Motor type	Penultimate position: Voltage identifier						Final position: Type of construction identifier				
	50 Hz				60 Hz		IM B 3	Price supplement			
	230 V∆ / 400 VY	400 V∆ / 690 VY	500 VY	500 V∆	460 VY	460 V∆		IM B 5	IM V 1 Without protective cover	IM V 1 With protective cover	IM B 35
1LG6 183 to 1LG6 313	1	6	3	5	**1**	**6**	**0**	1	1	4	**6**
1LG6 316 to 1LG6 318	–	6	–	5	**–**	**6**	**0**	–	8	4	**6**

Other voltage and/or frequency, voltage identifier **"9"**.
Order codes are required for this purpose (see "Technical information", "Voltages, currents and frequencies").

For other types of construction, see "Technical information", "Types of construction".

1) Only 60 Hz data according to EPACT shown on the rating plate.

Rated output	Size	Order No.	Operating data at rated output					Starting torque	Starting current	Stalling torque	Torque class	Moment of inertia J	Weight
		Order No. supplement for voltage and type of construction, see table below	Rated speed	Nominal efficiency level η	Power factor p.f.	Rated current at 460 V	Rated torque	For direct-on-line starting as multiple of the rated					Type of constr. IM B 3 approx.
								torque	current	torque			
HP			rpm	%		A	Nm				KL	kg m²	kg
Energy-saving motors according to EPACT, IP55 degree of protection													**CC 032A**
	1200 rpm, 6-pole, 60 Hz												
20 ●	180 L	**1LG6 186–6AA . .**	1178	91.0	0.80	25.5	121	2.9	6.5	3.0	16	0.203	175
25 ●	200 L	**1LG6 206–6AA . .**	1180	91.7	0.79	32	151	2.9	6.5	2.7	16	0.285	210
30 ●		**1LG6 207–6AA . .**	1180	91.7	0.80	38.5	181	2.9	6.4	2.7	16	0.362	240
40 ●	225 M	**1LG6 223–6AA . .**	1184	93.0	0.82	49	240	3.4	7.2	3.4	16	0.629	325
50 ●		**1LG6 228–6AA . .** [1]	1184	93.0	0.83	61	301	3.2	7.6	3.4	16	0.760	355
50	250 M	**1LG6 253–6AA . .**	1186	93.0	0.82	61	300	3.4	7.4	2.9	16	0.934	405
60 ●		**1LG6 258–6AA . .** [1]	1186	93.6	0.82	73	361	3.4	7.7	2.9	16	1.07	435
60	280 S	**1LG6 280–6AA . .**	1190	94.1	0.83	72	360	3.6	7.7	3.1	16	1.37	520
75	280 M	**1LG6 283–6AA . .**	1190	94.5	0.83	89	449	3.9	8.3	3.3	16	1.65	570
100 ●		**1LG6 288–6AA . .** [1]	1190	94.5	0.84	118	599	4.0	8.4	3.3	16	1.94	615
100 ●	315 S	**1LG6 310–6AA . .**	1191	94.5	0.82	120	598	3.3	8.4	3.4	16	2.50	760
125 ●	315 M	**1LG6 313–6AA . .**	1191	94.5	0.84	148	747	3.0	7.9	3.1	16	3.20	935
150 ●	315 L	**1LG6 316–6AA . .**	1192	95.0	0.84	176	897	3.3	8.5	3.3	16	4.02	1010
175 ●	315 L	**1LG6 317–6AA . .**	1192	95.4	0.84	205	1046	3.8	8.9	3.6	16	4.71	1180
200 ●	315 L	**1LG6 318–6AA . .**	1192	95.4	0.84	235	1195	4.0	9.4	4.0	16	5.39	1245

● With CC No. CC 032A

Order No. supplements

Motor type	**Penultimate position: Voltage identifier**						**Final position: Type of construction identifier**				
	50 Hz				**60 Hz**		IM B 3	Price supplement			
	230 V△ / 400 V⋎	400 V△ / 690 V⋎	500 V⋎	500 V△	460 V⋎	460 V△		IM B 5	IM V 1 Without protective cover	IM V 1 With protective cover	IM B 35
1LG6 186 to 1LG6 313	1	6	3	5	**1**	**6**	**0**	1	1	4	**6**
1LG6 316 to 1LG6 318	–	6	–	5	**–**	**6**	**0**	–	8	4	**6**

Other voltage and/or frequency, voltage identifier **"9"**.
Order codes are required for this purpose (see "Technical information", "Voltages, currents and frequencies").

For other types of construction, see "Technical information", "Types of construction".

1) Only 60 Hz data according to EPACT shown on the rating plate.

Selection and ordering data

Rated output	Size	Order No.	Operating data at rated output						Starting torque	Starting current	Stalling torque	Torque class	Moment of inertia	Weight
		Order No. supplement for voltage and type of construction, see table below	Rated speed	Efficiency η at 4/4-load	3/4-	Power factor p.f.	Rated current at 400 V	Rated torque	For direct-on-line starting as multiple of the rated torque	current	torque		J	Type of constr. IM B 3
kW			rpm	%	%		A	Nm				KL	kg m²	approx. kg
IP55 degree of protection, temperature class F														
	3000 rpm, 2-pole, 50 Hz													
30	180 M	**1LG4188–2AA . .**	2950	92.8	92.9	0.86	54 [1])	97	2.4	7.1	3.4	16	0.086	175
45	200 L	**1LG4208–2AA . .**	2955	93.6	93.7	0.89	78 [1])	145	2.5	6.9	3.2	16	0.18	255
55	225 M	**1LG4228–2AA . .**	2960	94.8	95.0	0.89	94 [1])	177	2.6	7.3	3.2	16	0.27	335
75	250 M	**1LG4258–2AA . .**	2970	94.5	94.5	0.88	130 [1])	241	2.4	7.1	3.1	16	0.48	420
110	280 M	**1LG4288–2AB . .**	2975	95.5	95.6	0.90	184 [1])	353	2.5	7.0	3.0	13	1.00	630
	1500 rpm, 4-pole, 50 Hz													
30	180 L	**1LG4188–4AA . .**	1465	91.7	91.9	0.80	59 [1])	196	2.6	6.3	2.9	16	0.14	180
37	200 L	**1LG4208–4AA . .**	1465	92.5	92.8	0.83	70 [1])	241	2.6	6.5	3.0	16	0.23	230
55	225 M	**1LG4228–4AA . .**	1475	93.4	93.9	0.86	99 [1])	356	2.5	6.5	2.7	16	0.49	330
75	250 M	**1LG4258–4AA . .**	1482	94.3	94.4	0.85	136 [1])	483	2.5	7.0	3.0	16	0.86	460
110	280 M	**1LG4288–4AA . .**	1488	95.2	94.9	0.84	198 [1])	706	2.8	7.9	3.3	16	1.71	680
	1000 rpm, 6-pole, 50 Hz													
18.5	180 L	**1LG4188–6AA . .**	970	89.6	90.3	0.80	37.5 [1])	182	2.3	4.9	2.4	16	0.20	175
30	200 L	**1LG4208–6AA . .**	975	90.9	91.3	0.80	60 [1])	294	2.6	5.8	2.6	16	0.36	245
37	225 M	**1LG4228–6AA . .**	978	92.2	93.0	0.83	70 [1])	361	2.5	5.9	2.8	16	0.62	325
45	250 M	**1LG4258–6AA . .**	982	93.3	93.8	0.83	84	438	2.7	6.3	2.3	16	0.93	405
75	280 M	**1LG4288–6AA . .**	985	93.8	94.3	0.85	136 [1])	727	3.0	6.8	2.8	16	1.65	570
	750 rpm, 8-pole, 50 Hz													
15	180 L	**1LG4188–8AB . .**	720	87.8	88.5	0.73	34 [1])	199	2.0	4.5	2.4	13	0.21	165
18.5	200 L	**1LG4208–8AB . .**	725	88.3	89.2	0.78	39	244	2.4	5.2	2.6	13	0.37	230
30	225 M	**1LG4228–8AB . .**	730	90.4	91.2	0.79	61 [1])	392	2.6	5.6	2.8	13	0.66	340
37	250 M	**1LG4258–8AB . .**	730	91.9	92.8	0.82	71	484	2.4	5.6	2.6	13	1.06	430
55	280 M	**1LG4288–8AB . .**	735	92.9	93.7	0.81	106	715	2.4	5.6	2.3	13	1.63	565

Order No. supplements

Motor type	**Penultimate position: Voltage identifier**						**Final position: Type of construction identifier**				
	50 Hz				**60 Hz**		IM B 3	Price supplement			
	230 VΔ / 400 VY	400 VΔ / 690 VY	500 VY	500 VΔ	460 VY (Outputs at 60 Hz see "Technical information")	460 VΔ		IM B 5	IM V 1 Without protective cover	IM V 1 With protective cover	IM B 35
1LG4 188 to 1LG4 288	**1**	**6**	**3**	**5**	**1**	**6**	**0**	**1**	**1**	**4**	**6**

Other voltage and/or frequency, voltage identifier **"9"**.
Order codes are required for this purpose (see "Technical information", "Voltages, currents and frequencies").

For other types of construction, see "Technical information", "Types of construction".

1) For connection to 230 V, parallel supply cables are required (see "Technical information", "Connections, circuits and terminal blocks").

Pole-change motors

The torque classification for pole-change motors only applies once the lowest speed has been activated until the operating speed when it is switched over to the next highest speed.

The motors can only be started direct-on-line.
For circuit diagrams, see online help in SD configurator.

Rated output		Size	Order No.	Operating data at rated output			Starting torque		Starting current		Stalling torque		Torque class	Moment of inertia J	Weight
			Order No. supplement for voltage and type of construction, see table below	Rated speed	Rated current at 400 V		For direct-on-line starting as multiple of the rated torque		current		torque				Type of constr. IM B 3
1000 rpm	1500 rpm				1000 rpm	1500 rpm	1000 rpm	1500 rpm	1000 rpm	1500 rpm	1000 rpm	1500 rpm			approx.
kW	**kW**			rpm	A	A							KL	kg m²	kg
Two-speed pole-change for driving fans, IP55 degree of protection, temperature class F															
		1000/1500 rpm, 6-/4-pole, 50 Hz, design with two windings													
5.5	**16**	180 M	**1LG4 183–1BD . .**	960/1460	12.0	31.5	1.6	1.7	4.0	5.3	1.8	2.5	10	0.082	155
6.5	**19**	180 L	**1LG4 186–1BD . .**	960/1460	14.0	36.5	1.6	1.7	4.0	5.2	1.8	2.4	10	0.086	175
9.5	**26**	200 L	**1LG4 207–1BD . .**	975/1460	20.0	49.0	1.9	1.7	5.0	5.1	2.2	2.4	10	0.151	235
12	**34**	225 S	**1LG4 220–1BD . .**	980/1465	24.5	63.0	2.3	1.7	5.7	5.6	2.1	2.3	10	0.295	285
14.5	**40**	225 M	**1LG4 223–1BD . .**	980/1470	28.5	72.0	2.2	1.9	5.6	5.8	2.1	2.3	10	0.378	340
18	**52**	250 M	**1LG4 253–1BD . .**	980/1475	34.0	91.0	2.0	2.0	4.9	5.9	2.0	2.7	10	0.447	380
25	**70**	280 S	**1LG4 280–1BD . .**	982/1478	47.0	124.0	2.1	2.2	5.0	6.2	1.9	2.6	10	1.19	540
30	**82**	280 M	**1LG4 283–1BD . .**	984/1480	56.0	148.0	2.5	2.4	5.5	6.6	2.2	2.8	10	1.39	580
750 rpm	1500 rpm				750 rpm	1500 rpm	750 rpm	1500 rpm	750 rpm	1500 rpm	750 rpm	1500 rpm			
		750/1500 rpm, 8-/4-pole, 50 Hz, version with one winding in Dahlander circuit													
4.5	**16**	180 M	**1LG4 183–0BB . .**	725/1465	12.6	31.0	1.4	2.2	3.6	6.8	2.0	3.1	10	0.117	155
5	**18.5**	180 L	**1LG4 186–0BB . .**	725/1470	14.2	35.0	1.6	2.4	3.7	7.2	2.1	3.3	10	0.144	180
7.5	**28**	200 L	**1LG4 207–0BB . .**	730/1465	21.5	52.0	2.1	2.7	4.3	7.3	2.5	2.9	10	0.191	220
9.5	**35**	225 S	**1LG4 220–0BB . .**	738/1478	26.0	64.0	2.0	1.7	4.4	6.9	2.3	2.9	10	0.447	295
11.5	**42**	225 M	**1LG4 223–0BB . .**	738/1475	30.5	75.0	1.9	2.4	4.5	6.9	2.2	3.0	10	0.486	330
14.5	**52**	250 M	**1LG4 253–0BB . .**	740/1482	38.0	94.0	2.0	2.5	4.0	6.8	1.8	2.6	10	0.856	430
19	**70**	280 S	**1LG4 280–0BB . .**	742/1482	49.0	124.0	1.8	2.0	4.0	6.3	1.8	2.5	10	1.19	530
23	**83**	280 M	**1LG4 283–0BB . .**	742/1485	58.0	146.0	1.9	2.2	4.2	7.2	1.8	2.7	10	1.71	665

Order No. supplements

Motor type	**Penultimate position: Voltage identifier**				**Final position: Type of construction identifier**				
	50 Hz, direct switch-on				IM B 3	Price supplement			
	230 V	400 V	500 V	690 V		IM B 5	IM V 1 Without protective cover	IM V 1 With protective cover	IM B 35
1LG4 183 to 1LG4 207	**1**	**6**	**5**	**0**	**0**	**1**	**1**	**4**	**6**
1LG4 220 to 1LG4 283	**1**	**6**	**5**	**0**	**0**	**1**	**1**	**4**	**6**

Other voltage and/or frequency, voltage identifier **"9"**.
Order codes are required for this purpose (see "Technical information", "Voltages, currents and frequencies").

For other types of construction, see "Technical information", "Types of construction".

Selection and ordering data

Rated voltage
For motors connected to converters, the tolerance to DIN EN 60034-1 is generally applicable, a rated voltage range is not usually specified (voltage identifiers 4, 5, 7 and 8).

1LA8 motors
It is important to note the following in the case of these motors:

The motors are designed with standard rotors and are suitable for mains and converter-fed operation. They are fitted with an insulated NDE bearing as standard.

For outputs from 900 kW upwards, operation on two parallel inverters without interphase transformers is possible, on request. 1LA8 motors are also available with separately driven fan (type 1PQ8).

Rated output	Size	Order No. / Order No. supplement for voltage and type of construction, see table below	Operating data at rated output: Rated speed	Efficiency η	Power factor p.f.	Rated current at 400 V	Rated torque	Starting torque (For direct-on-line starting as multiple of the rated torque)	Starting current (multiple of the rated current)	Stalling torque (multiple of the rated torque)	Torque class	Moment of inertia J	Weight, Type of constr. IM B 3 approx.
kW			rpm	%		A	Nm				KL	kg m²	kg
IP55 degree of protection, temperature class F, 2-, 4-, 6-, 8-pole, 50 Hz													
	3000 rpm, 2-pole, 50 Hz												
250	315	**1LA8 315–2PC . .**	2979	96.3	0.90	415	801	1.8	7.0	2.8	10	2.7	1300
315		**1LA8 317–2PC . .**	2979	96.7	0.91	520	1010	1.8	7.0	2.8	10	3.3	1500
355	355	**1LA8 353–2PC . .**	2980	96.6	0.90	590	1140	1.7	6.5	2.5	10	4.8	1900
400		**1LA8 355–2PC . .**	2980	96.7	0.91	660	1280	1.7	6.5	2.5	10	5.3	2000
500		**1LA8 357–2PC . .**	2982	97.1	0.91	820	1600	1.8	6.5	2.6	10	6.4	2200
560	400	**1LA8 403–2PC . .**	2985	97.1	0.91	910	1790	1.6	7.0	2.8	10	8.6	2800
630		**1LA8 405–2PC . .**	2985	97.1	0.91	1020	2020	1.6	7.0	2.8	10	9.6	3000
710		**1LA8 407–2PC . .**	2985	97.3	0.91	670 ● ■	2270	1.7	7.0	2.8	10	11	3200
800	450	**1LA8 453–2PE . .**	2986	97.2	0.91	760 ●	2560	0.9	7.0	3.0	5	19	4000
900		**1LA8 455–2PE . .**	2986	97.3	0.92	840 ●	2880	0.9	7.0	2.8	5	21	4200
1000		**1LA8 457–2PE . .**	2986	97.4	0.93	920 ●	3200	0.9	7.0	2.7	5	23	4400
	1500 rpm, 4-pole, 50 Hz												
250	315	▲ **1LA8 315–4PB . .**	1486	96.0	0.88	425	1600	1.9	6.5	2.8	13	3.6	1300
315		▲ **1LA8 317–4PB . .**	1488	96.3	0.88	540	2020	2.0	6.8	2.8	13	4.4	1500
355	355	▲ **1LA8 353–4PB . .**	1488	96.3	0.87	610	2280	2.1	6.5	2.6	13	6.1	1900
400		▲ **1LA8 355–4PB . .**	1488	96.3	0.87	690	2570	2.1	6.5	2.6	13	6.8	2000
500		**1LA8 357–4PB . .**	1488	96.8	0.88	850	3210	2.1	6.5	2.4	13	8.5	2200
560	400	**1LA8 403–4PB . .**	1492	96.8	0.88	950	3580	1.9	6.5	2.7	13	13	2800
630		**1LA8 405–4PB . .**	1492	97.0	0.88	1060	4030	1.9	6.8	2.7	13	14	3000
710		**1LA8 407–4PB . .**	1492	97.0	0.89	690 ● ■	4540	1.9	6.8	2.7	13	16	3200
800	450	**1LA8 453–4PC . .**	1492	97.0	0.88	780 ● ■	5120	1.6	7.0	2.6	10	23	4000
900		**1LA8 455–4PC . .**	1492	97.1	0.88	880 ● ■	5760	1.6	7.0	2.6	10	26	4200
1000		**1LA8 457–4PC . .**	1492	97.1	0.89	970 ●	6400	1.7	7.0	2.6	10	28	4400
	1000 rpm, 6-pole, 50 Hz												
200	315	**1LA8 315–6PB . .**	989	95.7	0.86	345	1930	2.0	6.3	2.5	13	6.0	1300
250		**1LA8 317–6PB . .**	989	95.9	0.86	430	2410	2.0	6.3	2.5	13	7.3	1500
315	355	**1LA8 355–6PB . .**	993	96.2	0.86	540	3040	2.2	6.5	2.8	13	13	2000
400		**1LA8 357–6PB . .**	993	96.5	0.86	690	3850	2.2	6.5	2.8	13	16	2200
450	400	**1LA8 403–6PB . .**	992	96.5	0.86	780	4330	2.2	6.5	2.8	13	21	2800
500		**1LA8 405–6PB . .**	992	96.5	0.86	860	4810	2.3	6.5	2.8	13	24	3000
560		**1LA8 407–6PB . .**	992	96.7	0.86	960	5390	2.3	6.5	2.8	13	27	3200
630	450	**1LA8 453–6PB . .**	993	96.8	0.86	1100	6060	2.0	6.5	2.6	13	35	4000
710		**1LA8 455–6PB . .**	993	96.8	0.86	710 ● ■	6830	2.0	6.5	2.5	13	39	4200
800		**1LA8 457–6PB . .**	993	97.0	0.86	790 ● ■	7690	2.0	6.5	2.5	13	44	4500
	750 rpm, 8-pole, 50 Hz												
160	315	**1LA8 315–8PB . .**	739	94.9	0.82	295	2070	2.1	6.0	2.3	13	6.0	1300
200		**1LA8 317–8PB . .**	739	95.2	0.82	370	2580	2.1	6.0	2.3	13	7.3	1500
250	355	**1LA8 355–8PB . .**	741	95.7	0.82	460	3220	2.1	6.1	2.4	13	13	2000
315		**1LA8 357–8PB . .**	741	96.0	0.82	580	4060	2.1	6.1	2.4	13	16	2200
355	400	**1LA8 403–8PB . .**	742	96.1	0.82	650	4570	2.0	6.5	2.6	13	21	2800
400		**1LA8 405–8PB . .**	742	96.2	0.82	730	5150	2.1	6.5	2.6	13	24	3000
450		**1LA8 407–8PB . .**	742	96.3	0.82	820	5790	2.1	6.5	2.6	13	27	3200
500	450	**1LA8 453–8PB . .**	744	96.4	0.81	920	6420	2.0	6.6	2.4	13	35	4000
560		**1LA8 455–8PB . .**	744	96.5	0.81	1040	7190	2.0	6.6	2.4	13	39	4200
630		**1LA8 457–8PB . .**	744	96.6	0.81	1160	8090	2.0	6.6	2.4	13	44	4500

● Rated current at 690 V. ■ Also supplied for 400 VΔ (voltage identifier **"9"** and order code **L1Y**).
▲ **Standardline for 1LA8 motors** (for more details see Page 3/13)

Order No. supplements

Motor type	Penultimate position: Voltage identifier, 50 Hz (no rated voltage range): 400 VΔ	400 VΔ / 690 VY [3])	500 VΔ	690 VΔ [3])	Final position: Type of construction identifier: IM B 3	Price supplement: IM V 1 Without protective cover	IM V 1 With protective cover	IM B 35
1LA8 315 to 1LA8 405	**4**	**8**	**5**	**–**	**0**	**8**	**4**	**6**
1LA8 407 to 1LA8 457	**4** [1])	**8** [1])	**5**	**7** [2])	**0**	**8**	**4**	**6**

For other types of construction, see "Technical information", "Types of construction".

For footnotes, see Page 3/23.

Rated voltage
For motors connected to converters, the tolerance to DIN EN 60034-1 is generally applicable, a rated voltage range is not specified.

1LA7, 1LA5 motors
It is important to note the following in the case of these motors: In contrast to the standard version, for the windings and motor protection, options C11, C12, C13, Y52, A10, A23 and for the mechanical design options D31, D40, K45, K46, H15 are not possible. Also, versions for Zone 2, 21 and 22 are not possible.

Rated output	Size	Order No.	Operating data at rated output					Starting torque	Starting current	Stalling torque	Torque class	Moment of inertia	Weight
		Order No. supplement for voltage and type of construction, see table below	Rated speed	Efficiency η	Power factor p.f.	Rated current at 690 V	Rated torque	For direct-on-line starting as multiple of the rated				J	Type of constr. IM B 3 approx.
								torque	current	torque			
kW			rpm	%		A	Nm				KL	kg m^2	kg
Aluminium housing, IP55 degree of protection, temperature class F													
	3000 rpm, 2-pole, 50 Hz												
3	100 L	**1LA7 106–2PM . .**	2890	84.0	0.85	3.50	9.9	2.8	6.8	3.0	16	0.0035	21
4	112 M	**1LA7 113–2PM . .**	2905	86.0	0.86	4.55	13	2.6	7.2	2.9	16	0.0059	27
5.5	132 S	**1LA7 130–2PM . .**	2925	86.5	0.89	6.00	18	2.0	5.9	2.8	16	0.015	37
7.5		**1LA7 131–2PM . .**	2930	88.0	0.89	8.00	24	2.3	6.9	3.0	16	0.019	42
11	160 M	**1LA7 163–2PM . .**	2940	89.5	0.88	11.6	36	2.1	6.5	2.9	16	0.034	63
15	160 M	**1LA7 164–2PM . .**	2940	90.0	0.90	15.4	49	2.2	6.6	3.0	16	0.043	72
18.5	160 L	**1LA7 166–2PM . .**	2940	91.0	0.91	18.6	60	2.4	7.0	3.1	16	0.051	82
22	180 M	**1LA5 183–2PM . .**	2940	91.7	0.88	23.0	71	2.5	6.9	3.2	16	0.077	113
30	200 L	**1LA5 206–2PM . .**	2945	92.3	0.89	30.5	97	2.4	7.2	2.8	16	0.14	159
37		**1LA5 207–2PM . .**	2945	92.8	0.89	37.5	120	2.4	7.7	2.8	16	0.16	179
45	225 M	**1LA5 223–2PM . .**	2960	93.6	0.89	45.0	145	2.8	7.7	3.4	16	0.2	209
	1500 rpm, 4-pole, 50 Hz												
2.2	100 L	**1LA7 106–4PM . .**	1420	82.0	0.82	2.75	15	2.5	5.6	2.8	16	0.0047	20
3		**1LA7 107–4PM . .**	1420	82.6	0.82	3.70	20	2.7	5.6	3.0	16	0.0055	23
4	112 M	**1LA7 113–4PM . .**	1440	85.0	0.83	4.75	27	2.7	6.0	3.0	16	0.012	29
5.5	132 S	**1LA7 130–4PM . .**	1455	86.0	0.81	6.60	36	2.5	6.3	3.1	16	0.018	39
7.5	132 M	**1LA7 133–4PM . .**	1455	87.0	0.82	8.80	49	2.7	6.7	3.2	16	0.023	46
11	160 M	**1LA7 163–4PM . .**	1460	88.5	0.84	12.4	72	2.2	6.2	2.7	16	0.043	67
15	160 L	**1LA7 166–4PM . .**	1460	90.0	0.84	16.6	98	2.6	6.5	3.0	16	0.055	81
18.5	180 M	**1LA5 183–4PM . .**	1460	90.5	0.83	20.5	121	2.3	7.5	3.0	16	0.13	113
22	180 L	**1LA5 186–4PM**	1460	91.2	0.84	24.0	144	2.3	7.5	3.0	16	0.15	123
30	200 L	**1LA5 207–4PM . .**	1465	91.8	0.86	32.0	196	2.6	7.0	3.2	16	0.24	157
37	225 S	**1LA5 220–4PM . .**	1470	92.9	0.87	38.5	240	2.8	7.0	3.2	16	0.32	206
45	225 M	**1LA5 223–4PM . .**	1470	93.4	0.87	46.5	292	2.8	7.7	3.3	16	0.36	232
	1000 rpm, 6-pole, 50 Hz												
1.5	100 L	**1LA7 106–6PM . .**	925	74.0	0.75	2.25	15	2.3	4.0	2.3	16	0.0047	20
2.2	112 M	**1LA7 113–6PM . .**	940	78.0	0.78	3.05	22	2.2	4.6	2.5	16	0.0091	24
3	132 S	**1LA7 130–6PM . .**	950	79.0	0.76	4.20	30	1.9	4.2	2.2	16	0.015	34
4	132 M	**1LA7 133–6PM . .**	950	80.5	0.76	5.50	40	2.1	4.5	2.4	16	0.019	41
5.5	132 M	**1LA7 134–6PM . .**	950	83.0	0.76	7.30	55	2.3	5.0	2.6	16	0.025	50
7.5	160 M	**1LA7 163–6PM . .**	960	86.0	0.74	9.90	75	2.1	4.6	2.5	16	0.044	70
11	160 L	**1LA7 166–6PM . .**	960	87.5	0.74	14.2	109	2.3	4.8	2.6	16	0.063	89
15	180 L	**1LA5 186–6PM . .**	970	89.5	0.77	18.2	148	2.0	5.2	2.4	16	0.15	126
18.5	200 L	**1LA5 206–6PM . .**	975	90.2	0.77	22.5	181	2.7	5.5	2.8	16	0.24	161
22		**1LA5 207–6PM . .**	975	90.8	0.77	26.5	215	2.8	5.5	2.9	16	0.28	183
30	225 M	**1LA5 223–6PM . .**	978	91.8	0.77	35.5	293	2.8	5.7	2.9	16	0.36	214

Order No. supplements

Motor type	**Penultimate position: Voltage identifier** no rated voltage range 690 V Y	**Final position: Type of construction identifier** IM B 3	IM B 5	Price supplement IM V 1 Without protective cover	IM V 1 With protective cover	IM B 14 With standard flange	IM B 14 With special flange	IM B 35
1LA7 106 to 1LA7 166	**8**	**0**	**1**	**1**	**4**	**2**	**3**	**6**
1LA5 183 to 1LA5 223	**8**	**0**	**1**	**1**	**4**	**–**	**–**	**6**

Other voltages with voltage identifier **"9"** and Order Code **L1Y**.
For other types of construction, see "Technical information", "Types of construction".

1) Not possible for 2- and 4-pole motors from 1LA8 407 upwards and for 6-pole motors from 1LA8 455 upwards.

2) Only for 2- and 4-pole motors from 1LA8 407 upwards and for 6-pole motors from 1LA8 455 upwards.

3) Operation of motors with standard insulation is only possible with converter circuit (dv/dt filter or sine filter).

Selection and ordering data

Rated voltage
For motors connected to converters, the tolerance to DIN EN 60034-1 is generally applicable, a rated voltage range is not specified.

1LA8 motors
These motors are also available with separately driven fans (type 1PQ8).

1LG6 motors
It is important to note the following in the case of these motors: In contrast to the standard version, for windings and motor protection, options C11, C12, C13, Y52, A10, and for versions for Zone 2, 21 and 22 options M34, M35, M38, M39, M72, M73 and for the mechanical design options D30, D31, D40, H15 are not possible. Option K30 "VIK version" can be ordered on request.

3

Rated output	Size	Order No.	Operating data at rated output: Rated speed	Efficiency η	Power factor p.f.	Rated current at 690 V	Rated torque	Starting torque	Starting current	Stalling torque	Torque class	Moment of inertia J	Weight Type of constr. IM B 3 approx.
		Order No. supplement for voltage and type of construction, see table below						For direct-on-line starting as multiple of the rated torque					
kW			rpm	%		A	Nm				KL	kg m²	kg
Cast iron housing, IP55 degree of protection, temperature class F													
	3000 rpm, 2-pole, 50 Hz												
22	180 M	**1LG6 183–2PM . .**	2955	93.7	0.88	22.5	71	2.5	7.2	3.4	16	0.086	180
30	200 L	**1LG6 206–2PM . .**	2960	93.1	0.89	30.5	97	2.4	7.0	3.3	16	0.15	225
37		**1LG6 207–2PM . .**	2960	93.6	0.89	37	119	2.5	7.2	3.3	16	0.18	255
45	225 M	**1LG6 223–2PM . .**	2965	94.4	0.89	45	145	2.5	7.3	3.2	16	0.27	330
55	250 M	**1LG6 253–2PM . .**	2975	95.0	0.90	54	177	2.4	6.8	3.0	16	0.47	420
75	280 S	**1LG6 280–2PM . .** ●	2975	95.0	0.89	74	241	2.5	7.0	3.0	13	0.83	530
90	280 M	**1LG6 283–2PM . .** ●	2978	95.3	0.90	88	289	2.6	7.6	3.1	13	1.00	615
110	315 S	**1LG6 310–2PM . .** ●	2982	95.5	0.91	106	352	2.4	6.9	2.8	13	1.40	790
132	315 M	**1LG6 313–2PM . .** ●	2982	95.8	0.91	126	423	2.6	7.1	2.9	13	1.60	915
160	315 L	**1LG6 316–2PM . .** ●	2982	96.2	0.92	152	512	2.5	7.1	2.9	13	2.1	1055
200		**1LG6 317–2PM . .** ●	2982	96.2	0.93	188	641	2.5	6.9	2.8	13	2.5	1245
240	315	**1LA8 315–2PM . .**	2978	96.1	0.90	230	770	1.8	7.0	3.0	10	2.7	1300
300		**1LA8 317–2PM . .**	2978	96.5	0.91	285	962	1.9	7.0	3.0	10	3.3	1500
345	355	**1LA8 353–2PM . .**	2981	96.4	0.90	335	1105	1.7	7.0	2.6	10	4.8	1900
390		**1LA8 355–2PM . .**	2981	96.6	0.91	370	1249	1.7	6.7	2.6	10	5.3	2000
485		**1LA8 357–2PM . .**	2982	97.0	0.91	460	1553	1.8	7.0	2.6	10	6.4	2200
545	400	**1LA8 403–2PM . .**	2986	97.1	0.91	520	1743	1.5	7.0	3.0	10	8.6	2800
610		**1LA8 405–2PM . .**	2986	97.1	0.92	570	1951	1.6	7.0	2.9	10	9.6	3000
680		**1LA8 407–2PM . .**	2986	97.2	0.92	640	2175	1.7	7.0	3.0	10	11	3200
775	450	**1LA8 453–2PM . .**	2987	97.2	0.92	730	2478	0.9	7.0	2.8	5	19	4000
875		**1LA8 455–2PM . .**	2987	97.3	0.92	820	2798	0.9	7.0	2.8	5	21	4200
970		**1LA8 457–2PM . .**	2987	97.4	0.93	900	3101	0.9	7.0	2.8	5	23	4400
	1500 rpm, 4-pole, 50 Hz												
18.5	180 M	**1LG6 183–4PM . .**	1470	92.1	0.83	20	120	2.5	6.4	3.0	16	0.12	155
22	180 L	**1LG6 186–4PM . .**	1470	92.7	0.84	23.5	143	2.5	6.7	3.1	16	0.14	180
30	200 L	**1LG6 207–4PM . .**	1470	92.7	0.85	32	195	2.6	6.7	3.3	16	0.23	225
37	225 S	**1LG6 220–4PM . .**	1480	93.6	0.85	39	239	2.7	6.8	3.0	16	0.40	290
45	225 M	**1LG6 223–4PM . .**	1480	94.1	0.85	47	290	2.8	6.9	3.0	16	0.49	330
55	250 M	**1LG6 253–4PM . .**	1485	94.8	0.87	56	354	2.6	7.5	3.0	16	0.86	460
75	280 S	**1LG6 280–4PM . .** ●	1485	94.7	0.87	76	482	2.5	6.8	2.9	16	1.40	575
90	280 M	**1LG6 283–4PM . .** ●	1486	95.1	0.86	92	578	2.7	7.5	3.1	16	1.70	675
110	315 S	**1LG6 310–4PM . .** ●	1488	95.6	0.87	110	706	2.7	7.1	2.9	16	2.3	810
132	315 M	**1LG6 313–4PM . .** ●	1488	95.9	0.88	130	847	2.7	7.3	2.9	16	2.9	965
160	315 L	**1LG6 316–4PM . .** ●	1490	96.1	0.88	158	1026	3.0	7.4	3.0	16	3.5	1105
200		**1LG6 317–4PM . .** ●	1490	96.1	0.88	198	1282	3.2	7.6	3.0	16	4.2	1305
235	315	**1LA8 315–4PM . .**	1485	95.8	0.87	235	1511	1.8	7.0	2.8	13	3.6	1300
290		**1LA8 317–4PM . .**	1485	96.0	0.88	285	1865	1.8	7.0	2.8	13	4.4	1500
340	355	**1LA8 353–4PM . .**	1488	96.0	0.87	340	2182	1.9	7.0	2.6	13	6.1	1900
385		**1LA8 355–4PM . .**	1488	96.2	0.87	385	2471	2.0	7.0	2.6	13	6.8	2000
480		**1LA8 357–4PM . .**	1488	96.5	0.87	480	3081	2.1	7.0	2.5	13	8.5	2200
545	400	**1LA8 403–4PM . .**	1491	96.6	0.88	540	3491	1.9	7.0	2.6	13	13	2800
615		**1LA8 405–4PM . .**	1491	96.8	0.88	600	3939	1.9	7.0	2.7	13	14	3000
690		**1LA8 407–4PM . .**	1491	96.9	0.89	670	4420	1.9	7.0	2.6	13	16	3200
785	450	**1LA8 453–4PM . .**	1492	96.8	0.88	770	5025	1.5	6.9	2.5	10	23	4000
880		**1LA8 455–4PM . .**	1492	97.0	0.87	870	5633	1.6	7.0	2.6	10	26	4200
980		**1LA8 457–4PM . .**	1492	97.1	0.89	950	6273	1.7	7.0	2.6	10	28	4400

● Insulated NDE bearing is recommended (Order Code **L27**)

Order No. supplements

Motor type	Penultimate position: Voltage identifier no rated voltage range 690 VY	690 VΔ	Final position: Type of construction identifier IM B 3	IM B 5	Price supplement IM V 1 Without protective cover	IM V 1 With protective cover	IM B 35
1LG6 183 to 1LG6 313	**8**	**–**	**0**	**1**	**1**	**4**	**6**
1LG6 316 to 1LG6 318	**8**	**–**	**0**	**–**	**8**	**4**	**6**
1LA8 315 to 1LA8 405	**8**	**–**	**0**	**–**	**8**	**4**	**6**
1LA8 407 to 1LA8 457	**–**	**7**	**0**	**–**	**8**	**4**	**6**

Other voltages with voltage identifier **"9"** and Order Code **L1Y**. For other types of construction, see "Technical information", "Types of construction".

Rated output	Size	Order No. / Order No. supplement for voltage and type of construction, see table below	Operating data at rated output: Rated speed	Effi-ciency η	Power factor p.f.	Rated current at 690 V	Rated torque	Starting torque (For direct-on-line starting as multiple of the rated torque)	Starting current (multiple of the rated current)	Stalling torque (multiple of the rated torque)	Torque class	Moment of inertia J	Weight Type of constr. IM B 3 approx.
kW			rpm	%		A	Nm				KL	kg m²	kg
Cast iron housing, IP55 degree of protection, temperature class F													
	1000 rpm, 6-pole, 50 Hz												
15	180 L	**1LG6 186–6PM . .**	975	90.0	0.81	17.2	147	2.4	5.5	2.5	16	0.20	175
18.5	200 L	**1LG6 206–6PM . .**	978	90.5	0.81	21	181	2.4	5.6	2.4	16	0.29	210
22	200 L	**1LG6 207–6PM . .**	978	91.4	0.82	24.5	215	2.4	5.6	2.4	16	0.36	240
30	225 M	**1LG6 223–6PM . .**	980	92.6	0.83	32.5	292	2.8	6.5	2.9	16	0.63	325
37	250 M	**1LG6 253–6PM . .**	985	93.1	0.83	40	359	2.9	6.8	2.5	16	0.93	405
45	280 S	**1LG6 280–6PM . .** ●	988	93.9	0.85	47	435	3.0	6.8	2.7	16	1.40	520
55	280 M	**1LG6 283–6PM . .** ●	988	93.9	0.85	58	532	3.3	7.3	2.9	16	1.60	570
75	315 S	**1LG6 310–6PM . .** ●	990	94.6	0.83	80	723	2.8	7.3	3.0	16	2.5	760
90	315 M	**1LG6 313–6PM . .** ●	990	94.9	0.85	93	868	2.7	7.3	2.9	16	3.2	935
110	315 L	**1LG6 316–6PM . .** ●	990	95.2	0.85	114	1061	2.9	7.4	2.9	16	4.0	1010
132		**1LG6 317–6PM . .** ●	990	95.4	0.85	136	1273	3.1	7.8	3.1	16	4.7	1180
160		**1LG6 318–6PM . .** ●	990	95.3	0.86	164	1543	3.2	7.8	3.1	16	5.4	1245
190	315	**1LA8 315–6PM . .**	990	95.5	0.85	196	1833	2.1	7.0	2.7	13	6.0	1300
235		**1LA8 317–6PM . .**	990	95.7	0.86	240	2267	2.2	7.0	2.7	13	7.3	1500
300	355	**1LA8 355–6PM . .**	992	96.2	0.86	305	2888	2.2	7.0	2.8	13	13	2000
380		**1LA8 357–6PM . .**	992	96.4	0.86	385	3658	2.3	7.0	2.9	13	16	2200
435	400	**1LA8 403–6PM . .**	993	96.4	0.85	445	4184	2.1	7.0	2.8	13	21	2800
485		**1LA8 405–6PM . .**	993	96.5	0.86	490	4664	2.1	7.0	2.8	13	24	3000
545		**1LA8 407–6PM . .**	993	96.6	0.86	550	5241	2.1	7.0	2.7	13	27	3200
615	450	**1LA8 453–6PM . .**	993	96.8	0.84	630	5915	2.0	7.0	2.7	13	35	4000
690		**1LA8 455–6PM . .**	993	96.8	0.85	700	6636	1.9	7.0	2.5	13	39	4200
780		**1LA8 457–6PM . .**	993	96.9	0.85	790	7502	2.0	7.0	2.6	13	44	4500
	750 rpm, 8-pole, 50 Hz												
11	180 L	**1LG6 186–8PM . .**	725	88.1	0.76	13.8	145	1.9	4.6	2.2	13	0.21	165
15	200 L	**1LG6 207–8PM . .**	725	88.2	0.80	17.8	198	2.3	5.3	2.6	13	0.37	235
18.5	225 S	**1LG6 220–8PM . .**	730	89.9	0.81	21.5	242	2.3	5.6	2.6	13	0.55	295
22	225 M	**1LG6 223–8PM . .**	730	90.6	0.81	25	288	2.4	5.8	2.8	13	0.66	335
30	250 M	**1LG6 253–8PM . .**	735	91.9	0.82	33.5	390	2.5	6.0	2.8	13	1.10	435
37	280 S	**1LG6 280–8PM . .** ●	738	92.6	0.81	41.5	479	2.3	5.7	2.3	13	1.40	510
45	280 M	**1LG6 283–8PM . .** ●	738	93.3	0.81	50	582	2.6	6.1	2.4	13	1.60	560
55	315 S	**1LG6 310–8PM . .** ●	740	93.8	0.82	60	710	2.5	6.3	2.9	13	2.5	750
75	315 M	**1LG6 313–8PM . .** ●	740	93.9	0.83	81	968	2.5	6.7	2.9	13	3.1	840
90	315 L	**1LG6 316–8PM . .** ●	740	94.2	0.84	95	1161	2.4	6.3	2.8	13	3.9	1005
110		**1LG6 317–8PM . .** ●	740	94.3	0.84	116	1420	2.4	6.4	2.6	13	4.5	1100
132		**1LG6 318–8PM . .** ●	740	94.4	0.84	140	1704	2.5	6.7	2.9	13	5.3	1270
145	315	**1LA8 315–8PM . .**	740	94.6	0.79	162	1871	2.2	6.4	2.5	13	6.0	1300
180		**1LA8 317–8PM . .**	740	94.9	0.80	198	2323	2.2	6.4	2.5	13	7.3	1500
230	355	**1LA8 355–8PM . .**	743	95.5	0.80	250	2956	2.1	6.8	2.4	13	13	2000
290		**1LA8 357–8PM . .**	743	95.7	0.81	315	3727	2.1	6.8	2.4	13	16	2200
335	400	**1LA8 403–8PM . .**	743	96.0	0.80	365	4306	1.9	6.6	2.6	13	21	2800
375		**1LA8 405–8PM . .**	743	96.1	0.80	410	4820	1.9	6.9	2.7	13	24	3000
425		**1LA8 407–8PM . .**	743	96.2	0.79	470	5463	1.9	6.8	2.7	13	27	3200
485	450	**1LA8 453–8PM . .**	745	96.5	0.78	540	6217	1.9	6.8	2.5	13	35	4000
545		**1LA8 455–8PM . .**	745	96.6	0.78	610	6986	2.0	6.8	2.5	13	39	4200
600		**1LA8 457–8PM . .**	745	96.7	0.79	660	7691	2.0	6.8	2.5	13	44	4500

● Insulated NDE bearing is recommended (Order Code **L27**)

Order No. supplements

Motor type	**Penultimate position: Voltage identifier** no rated voltage range 690 V⋎	690 V∆	**Final position: Type of construction identifier** IM B 3	IM B 5	Price supplement IM V 1 Without protective cover	IM V 1 With protective cover	IM B 35
1LG6 183 to 1LG6 313	**8**	–	**0**	**1**	**1**	**4**	**6**
1LG6 316 to 1LG6 318	**8**	–	**0**	–	**8**	**4**	**6**
1LA8 315 to 1LA8 457	**8** [1])	**7** [2])	**0**	–	**8**	**4**	**6**

Other voltages with voltage identifier **"9"** and Order Code **L1Y**.

For other types of construction, see "Technical information", "Types of construction".

1) Not possible for 6-pole motors from 1LA8 455 upwards.

2) Available for 6-pole motors from 1LA8 455 upwards only.

Selection and ordering data · Order codes

Additional order suffix **–Z** with order code	Special designs	Motor type – Size					
		Aluminium			Cast iron		
		1LA7	1LA5	1LA9	1LA6	1LG4/1LG6	1LA8
Windings and motor protection							
C11	Used acc. to class F (up to CT 40 °C) with service factor	56 – 160 [4])	180 – 225 [4])	56 – 200 [3])	100 – 160	180 – 315 [4])	315 – 450
		Service factor 1.1; from size 400 SF 1.05; 1LG6 and 1LA9 SF 1.15					
C12	Used acc. to class F (up to CT 40 °C) With increased power [1])	56 – 160 [4])	180 – 225 [4])	56 – 200 [3])	100 – 160	180 – 315 [4])	315 – 450 Not possible w. converter-fed operation
		10 % increase in power, size 400 upwards 5 %; 1LA9 and 1LG6 15 %					
C13	Used acc. to class F With increased coolant air temperature	56 – 160 [4])	180 – 225 [4])	56 – 200 [3])	100 – 160	180 – 315 [4])	315 – 450
		Coolant temperature 55 °C, size 400 upwards 50 °C					
Y52 • and req. power CT ... °C or AH... m above sea level	Used acc. to class F – other requirements	56 – 160 [4])	180 – 225 [4])	56 – 200	100 – 160	180 – 315 [4])	315 – 450 Not possible w. converter-fed operation
A10	PTC thermistor version for alarm on converter-fed operation in Zones 2, 21, 22 [2])	56 – 160 [4])	–	56 – 200	100 – 160	180 – 315 [4])	–
A11	Motor protection by means of PTC thermistor with 3 embedded temperature sensors for shutdown [2])	56 – 160	180 – 225	56 – 200	100 – 160	180 – 315	–
A12	Motor protection by means of PTC thermistor with 6 embedded temp. sensors for alarm and shutdown [2])	56 – 160	180 – 225	56 – 200	100 – 160	180 – 315	Standard version
A23	Motor temperature sensing with embedded KTY 84-130 temperature sensors [2])	56 – 160 [4])	180 – 225 [4])	56 – 200	100 – 160	180 – 315	315 – 450
A25	Motor temperature sensing with 2 embedded KTY 84-130 temperature sensors [2])	–	–	–	–	180 – 315	–
A61	Installation of 6 PT100 G resistance thermometers	–	–	–	–	180 – 315	315 – 450
A72	Installation of 2 PT 100 screw-in resistance thermometers (basic circuit) for rolling-contact bearing	–	–	–	–	180 – 315	315 – 450
Paint finish							
	Standard paintwork in RAL 7030 stone grey	–				Standard version	
K26	Special paintwork in RAL 7030 stone grey	Standard version (without order code)				180 – 315	315 – 450
M16	Special paintwork in RAL 1002 sand yellow	56 – 160	180 – 225	56 – 200	100 – 160	180 – 315 With order code **Y54** and special paintwork RAL	315 – 450 With order code **Y54** and special paintwork RAL ....
M17	Special paintwork in RAL 1013 pearl white						
M18	Special paintwork in RAL 3000 flame red						
K27	Special paintwork in RAL 6011 mignonette green						
M19	Special paintwork in RAL 6021 pale green						
M20	Special paintwork in RAL 7001 silver grey						
K28	Special paintwork in RAL 7031 bluish grey						
L42	Special paintwork in RAL 7032 pebble grey						
M21	Special paintwork in RAL 7035 light grey						
M22	Special paintwork in RAL 9001 cream						
M23	Special paintwork in RAL 9002 grey white						
L43	Special paintwork in RAL 9005 jet black						
Y54 • And special paint RAL....	Special paintwork in other colors: RAL 1015, 1019, 2003, 2004, 3007, 5007, 5009, 5010, 5012, 5015, 5017, 5018, 5019, 6019, 7000, 7004, 7011, 7016, 7022, 7033	56 – 160	180 – 225	56 – 200	100 – 160	180 – 315	315 – 450
Y53 • And standard paint RAL....	Standard paintwork in other colors	–	–	–	–	180 – 315	315 – 450
K23	Unpainted (only cast iron parts primed)	56 – 160	180 – 225	56 – 200	100 – 160	180 – 315	315 – 450
K24	Unpainted, only primed	56 – 160	180 – 225	56 – 200	100 – 160	180 – 315	–

• Additional plain text required.

1) The rating plate only shows the 50 Hz data.

2) For appropriate tripping unit, see Catalogue LV 10. In the case of pole-change motors with separate windings, twice the number of temperature sensors is required. When used in areas subject to explosion hazards, a certified tripping unit is necessary.

3) Not possible for the version with increased power.

4) Not possible for motors with special insulation up to 690 V.

RAL No.	Name of color	RAL No.	Name of color
1015	Light ivory	5017	Traffic blue
1019	Grey beige	5018	Turquoise blue
2003	Pastel orange	5019	Capri blue
2004	Pure orange	6019	Pastel green
3007	Wine red	7000	Squirrel grey
5007	Black blue	7004	Signal grey
5009	Azure blue	7011	Iron grey
5010	Gentian blue	7016	Anthracite grey
5012	Light blue	7022	Umbra grey
5015	Sky blue	7033	Cement grey

Additional order suffix **–Z** with order code	Special designs	Motor type – Size					
		Aluminium			Cast iron		
		1LA7	1LA5	1LA9	1LA6	1LG4/1LG6	1LA8
Version for zones according to ATEX [1]							
M72 [2]	Version for Zone 2 for mains-fed operation EEx nA II T3 acc. to EN 50 021, Ex nA II T3 acc. to IEC 60 079-15	63 – 160	–	63 – 160 [4]	100 – 160	180 – 315 [4]	315 – 450
M73 [2][3][5]	Version for Zone 2 for converter-fed operation EEx nA II T3 acc. to EN 50 021, Ex nA II T3 acc. to IEC 60 079-15	63 – 160	–	63 – 160 [4]	100 – 160	180 – 315 [4]	315 – 450
M34 [6]	Version for Zone 21 for mains-fed operation	56 – 160	180 – 225	56 – 200 [4]	100 – 160	180 – 315 [4]	–
M38 [5][6]	Version for Zone 21 for converter-fed operation	56 – 160	180 – 225	56 – 200 [4]	100 – 160	180 – 315 [4]	–
M35 [7]	Version for Zone 22 for mains-fed operation	56 – 160	180 – 225	56 – 200 [4]	100 – 160	180 – 315 [4]	315 – 450
M39 [5][7]	Version for Zone 22 for converter-fed operation	56 – 160	180 – 225	56 – 200 [4]	100 – 160	180 – 315 [4]	315 – 450
Distributed drive systems							
G55 [8]	ECOFAST motor plug Han-Drive 10e for 230 VΔ /400 VY	56 – 132	–	56 – 132 [11]	–	–	–
G56 [8]	ECOFAST motor plug, EMC resistant, Han-Drive 10e for 230 VΔ /400 VY	56 – 132	–	–	–	–	–
H90 [9]	MICROSTARTER direct-on-line starter with 24 V DC activation, with M25 metric cable entry	63 – 112	–	–	–	–	–
H91 [9]	MICROSTARTER direct-on-line starter with 24 V DC activation, with HAN Q8 plug connectors	63 – 112	–	–	–	–	–
H92 [9]	MICROSTARTER direct-on-line starter with AS-Interface connection, with M25 metric cable entry	63 – 112	–	–	–	–	–
H93 [9]	MICROSTARTER direct-on-line starter with AS-Interface connection, with HAN Q8 plug connectors (ECOFAST)	63 – 112	–	–	–	–	–
H94 [9]	MICROSTARTER reversing starter with AS-Interface connection, with M25 metric cable entry	63 – 112	–	–	–	–	–
H95 [9]	MICROSTARTER reversing starter with AS-Interface connection, with HAN Q8 plug connectors (ECOFAST)	63 – 112	–	–	–	–	–
Marine version – "Operation below deck" [10] [12] [14]							
E00	Without certificate acc. to ABS 50 °C/CCS 45 °C/ RINA 45 °C temperature class F used acc. to F	56 – 160	180 – 225	56 – 200	100 – 160	180 – 315	–
E11	Certified according to GL (Germanischer Lloyd), Germany, CT 45 °C, temperature class F used acc. to F	56 – 160	180 – 225	56 – 200	100 – 160	180 – 315	315 – 450 [13]
E21	Certified according to LRS (Lloyds Register of Shipping), Great Britain, CT 45 °C, temperature class F used acc. to F	56 – 160	180 – 225	56 – 200	100 – 160	180 – 315	315 – 450 [13]
E31	Certified according to BV (Bureau Veritas), France, CT 45 °C, temperature class F used acc. to F	56 – 160	180 – 225	56 – 200	100 – 160	180 – 315	315 – 450 [13]
E51	Certified according to DNV (Det Norske Veritas), Norway, CT 45 °C, temperature class F used acc. to F	56 – 160	180 – 225	56 – 200	100 – 160	180 – 315	315 – 450 [13]
E61	Certified according to ABS (American Bureau of Shipping), USA, CT 50 °C, temperature class F used acc. to F	–	–	–	–	–	315 – 450 [13]
E71	Certified according to CCS (Chinese Classification Society), China, CT 45 °C, temperature class F used acc. to F	–	–	–	–	–	315 – 450 [13]
E80	Motor for use in shipping, higher ambient temperature and/or used acc. to F in accordance with B	–	–	–	–	–	315 – 450 [13]

1) Modular installation and additional modules not possible; anti-condensation heating not possible up to size 200L. The designs for the zones are not possible for motors with UL(D31), CSA(D40) and with special insulation up to 690 V. For pole-change motors on request.

2) The motors have no rated voltage range.

3) To comply with the standard, the motor and converter must be tested as a unit. For 1LA8 motors, please specify constant torque drive or pump/compressor drive.

4) Not possible for the version with increased power.

5) PTC thermistors for temperature class B are included with this option.

6) Version for conductive dust particles, IP65 degree of protection.

7) Version only for non-conductive dust particles, IP55 degree of protection.

8) Not possible for pole-change motors. Only one sensor (temperature sensor or PTC thermistor) connectable.

9) The MICROSTARTER always contains one PTC thermistor with temperature sensors (option A11) and the associated evaluation electronics. It is possible for pole-change motors with two separate windings and motors other than 1LA7 to be used, on request.

10) Works test certificate 2.3 to EN 10204 is also supplied (does not apply to Order Code **E00**). Individual acceptance test must be specified in plain text on ordering if required (price supplement).

11) Not possible for 1LA9 size 132 motors with increased power.

12) Derating may be necessary in the case of (E) Exn (Zone 2) motors and 1LA9 motors with increased power.

13) The 1LA8 motors do not have a type approval test certificate (individual acceptance test required).

14) Utilization of temperature class F according to B can cause derating.

Selection and ordering data · Order codes

Additional order suffix **–Z** with order code	Special designs	Motor type – Size					
		Aluminium			Cast iron		
		1LA7	1LA5	1LA9	1LA6	1LG4/1LG6	1LA8
Modular assembly[1])							
H57[2])	Mounting of 1XP8 001–1 rotary pulse encoder (HTL)	100 – 160	180 – 225	–	100 – 160	180 – 315	–
H58[2])	Mounting of 1XP8 001–2 rotary pulse encoder (TTL)	100 – 160	180 – 225	–	100 – 160	180 – 315	–
G17[2])	Mounting of separately driven fan	100 – 160	180 – 225	–	100 – 160	180 – 315[4])	–
H61[2])	Mounting of separately driven fan and 1XP8 001–1 rotary pulse encoder	100 – 160	180 – 225	–	100 – 160	180 – 315	–
H97[2])	Mounting of separately driven fan and 1XP8 001–2 rotary pulse encoder	100 – 160	180 – 225	–	100 – 160	180 – 315	–
G26[2])	Mounting of brake	63 – 160	180 – 225	–	–	180 – 315[4])	–
H62[2])	Mounting of brake and 1XP8 001–1 rotary pulse encoder	100 – 160	180 – 225	–	–	180 – 315	–
H98[2])	Mounting of brake and 1XP8 001–2 rotary pulse encoder	100 – 160	180 – 225	–	–	180 – 315	–
H63[2])	Mounting of brake and separately driven fan	100 – 160	180 – 225	–	–	180 – 315[4])	–
H64[2])	Mounting of brake, separately driven fan and 1XP8 001–1 rotary pulse encoder	100 – 160	180 – 225	–	–	180 – 315	–
H99[2])	Mounting of brake, separately driven fan and 1XP8 001–2 rotary pulse encoder	100 – 160	180 – 225	–	–	180 – 315	–
K82	Manual brake release with lever	63 – 160	180 – 225	–	–	180 – 315	–
C00	Brake supply voltage 24 V DC	63 – 160	180 – 225	–	–	180 – 315	–
C01	Brake supply voltage 400 V AC, 50 Hz	63 – 160	180 – 225	–	–	180 – 315	–
Additional modules [1]) [4])							
H70	Mounting of LL861 900 220 rotary pulse encoder	100 – 160	180 – 225	–	100 – 160	180 – 315	315 – 450
H71	Mounting of LL861 900 220 rotary pulse encoder to be provided	100 – 160	180 – 225	–	100 – 160	180 – 315	–
H78	Prepared for mounting of LL861 900 220 rotary pulse encoder	100 – 160	180 – 225	–	100 – 160	180 – 315	315 – 450
H72	Mounting of HOG 9 D 1024 I rotary pulse encoder	100 – 160	180 – 225	–	100 – 160	180 – 315	–
H74	Mounting of HOG 9 rotary pulse encoder to be provided	100 – 160	180 – 225	–	100 – 160	180 – 315	–
H79	Prepared for mounting of HOG 9 D 1024 I rotary pulse encoder	100 – 160	180 – 225	–	100 – 160	180 – 315	–
H73	Mounting of HOG 10 D 1024 I rotary pulse encoder	100 – 160	180 – 225	–	–	180 – 315	315 – 450
H75	Mounting of HOG 10 rotary pulse encoder to be provided	100 – 160	180 – 225	–	–	180 – 315	–
H80	Prepared for mounting of HOG 10 D 1024 I rotary pulse encoder	100 – 160	180 – 225	–	–	180 – 315	315 – 450
Y70 •	Mounting of special rotary pulse encoder	–	–	–	–	–	315 – 450
Converter installation							
H15[3])	Prepared for mounting the MMI	56 – 132	–	–	–	–	–
Mechanical design							
K06	Two-part plate on terminal block	–	–	–	–	200 – 315[5])	315 – 355. for 400 and 450 standard version
K09	Terminal box on RHS (view onto drive end)	80 – 160	180 – 225	80 – 200	100 – 160	180 – 315	Standard version
K10	Terminal box on LHS (view onto drive end)	80 – 160	180 – 225	80 – 200	100 – 160	180 – 315	315 – 450
K11	Terminal box on top, feet screwed on	–	–	–	–	180 – 315	–
K83	Rotation of terminal box by 90°, inserted from drive end	56 – 160	180 – 225	56 – 200	100 – 160	180 – 315	315 – 450
K84	Rotation of terminal box by 90°, inserted from non-drive end	56 – 160	180 – 225	56 – 200	100 – 160	180 – 315	315 – 450
K85	Rotation of terminal box by 180°	56 – 160	180 – 225	56 – 200	100 – 160	180 – 315	315 – 450
M46	Bolt-type screw terminal for cable connection, accessories pack (3 units)	–	–	–	–	250 – 315[5])	–

• Additional plain text required.

1) Second shaft end not possible. Further modules are not possible in combination with the modular assembly system.

2) Order codes cannot be combined.

3) Converter mounting is possible in accordance with the COMBIMASTER spectrum for motors with 230 V Δ /400 V Y voltages. For further details, see Catalogues DA 51.3 and DA 64. Not possible for motors with special insulation for 690 V.

4) For 1LG4/1LG6 motors, the Order Codes **G17**, **G26** and **H63** for frame sizes 225 can also be combined with all rotary pulse encoders listed under "Additional modules".

5) Not possible for designs for zones; standard version for VIK.

Additional order suffix **–Z** with order code	Special designs	Motor type – Size					
		Aluminium			Cast iron		
		1LA7	1LA5	1LA9	1LA6	1LG4/1LG6	1LA8
Mechanical design (continued)							
M47	Saddle terminals for cable lug free connection	–	–	–	–	250 – 315 [1])	–
D02	Coolant temperature –50 °C to 40 °C	–	–	–	–	180 – 315	–
D03	Coolant temperature –40 °C to 40 °C	–	–	–	–	180 – 315	–
D04	Coolant temperature –30 °C to 40 °C	–	–	–	–	180 – 315	–
D01	CCC China Compulsory Certification	56 – 112 [2])	–	56 – 90 [2])	–	–	–
D30	Electrical acc. to NEMA MG1-12 [3])	56 – 160	180 – 225	56 – 200 [4])	100 – 160	180 – 315 [4])	–
D31	Designed to UL with "recognition mark" [5])	56 – 160	180 – 225	56 – 200	100 – 160	180 – 315	–
D40	Canadian standards (CSA) [6])[3])	56 – 160	180 – 225	56 – 200	100 – 160	180 – 315	315 – 450
		With voltage identifier 9 and order code for voltage and frequency					
K01	Vibrational severity grade R	56 – 160	180 – 225	56 – 200	100 – 160	180 – 315	315 – 450
		For pole-change motors on request					
K16	Second standard shaft end [7])	56 – 160	180 – 225	56 – 200	100 – 160	180 – 315	315 – 450
K17	Radial sealing ring on drive end with flange types [8])	56 – 160	180 – 225	56 – 200	100 – 160	180 – 315	–
K20	Bearing for increased cantilever forces [9])	100 – 160	180 – 225	100 – 200	100 – 160	180 – 315	315 – 355
K36	Special bearing for drive end and non drive end, bearing size 63	–	–	–	–	180 – 250, 280 – 315 [10])	–
K40	Regreasing device	100 – 160	180 – 225	100 – 200 [11])	100 – 160	180 – 250, standard version from 280 upwards	
L04	Locating bearing non drive end	56 – 132, 160 standard version	–	56 – 132	100 – 132, 160 standard version	Standard version	–
K94	Locating bearing drive end	56 – 160	180 – 225	56 – 200	100 – 160	180 – 315	–
L27	Insulated bearing cartridge	–	–	–	–	225 – 315	Standard for operation on frequency converter
M44	Earth brushes for converter-fed operation	–	–	–	–	280 – 315	
L13	External earthing	56 – 160	180 – 225	56 – 200	100 – 160	Standard version	
K30	VIK design [12])	56 – 160	–	56 – 160	100 – 160	180 – 315 [13])	315 – 355
K31	Extra rating plate, loose	56 – 160	180 – 225	56 – 200	100 – 160	180 – 315	315 – 450
K32	With two additional lifting rings for IM V1 / IM V3	–	180 – 225	–	–	–	–
Y82 • and order codes	Extra rating plate	56 – 160	180 – 225	56 – 200	100 – 160	180 – 315	315 – 450
K37	Low-noise design for 2-pole motors with clockwise direction of rotation	132 – 160	180 – 225	180 – 200	132 – 160	180 – 315 [14])	315, for 355 – 450 standard version
K38	Low-noise design for 2-pole motors with anticlockwise direction of rotation	132 – 160	180 – 225	180 – 200	132 – 160	180 – 315 [14])	315 – 450
K45	Anti-condensation heating for 230 V [15])	56 – 160 [3])	180 – 225 [3])	56 – 200	100 – 160	180 – 315	315 – 450
K46	Anti-condensation heating for 115 V [15])	56 – 160 [3])	180 – 225 [3])	56 – 200	100 – 160	180 – 315	315 – 450

• Additional plain text required.

1) Standard for designs for Zone 2, Zone 21, and VIK (Order Code **K30**).

2) The following motors require a CCC certificate:
– 2-pole motors: ≤ 2.2 kW
– 4-pole motors: ≤ 1.1 kW
– 6-pole motors: ≤ 0.75 kW
– 8-pole motors: ≤ 0.55 kW

3) Not possible for motors with special insulation up to 690 V.

4) For designs in EPACT or UL standard version (no order code required).

5) Possible up to 600 V.

6) The rated voltage is shown on the rating plate.

7) Motors of size 315 in vertical designs for version with second shaft end are available on request. Design with cover not available.

8) Not possible for type IM V3. Not available for 2-pole 1LG4/1LG6 motors.

9) Not possible for:
2-pole 1LG4/1LG6 motors of size 315L in vertical design;
2-pole 1LA8 motors, sizes 315 to 355;
1LA8 motors in vertical design.
Vibrational severity grade R on request.

10) Frame sizes 280 to 315 (standard version), but not available for 2-pole 1LG4/1LG6 motors with frame size 280.

11) Not possible for 1LA9 134–6.

12) Modular assembly, additional modules, anti-condensation heating up to frame size 200L and design for Zones 21/22 not available.
For 2-pole motors 1LG4/1LG6 size 315, additional low noise version is required, order code K37 or K38. For 1LA8 motors, note power and dimensions. For motors 1LA8 353 to 357, the terminal box cannot be rotated by 4 x 90°.
For motors with special insulation up to 690 V, on request.

13) Not possible for 2-pole 1LG4/1LG6 motors, size 315L, vertical designs; vibrational severity grade R on request.

14) Not required for 1LG6 motors because these motors are already noise optimized.

15) For 1LA motors in Zone 21, built-in anti-condensation heating is not possible up to size 200L. For Zones 2 and 22 on request.

Selection and ordering data · Order codes

Additional order suffix **–Z** with order code	Special designs	Motor type – Size					
		Aluminium			Cast iron		
		1LA7	1LA5	1LA9	1LA6	1LG4/1LG6	1LA8
Mechanical design (continued)							
L36	Sheet metal fan cover	–	–	–	–	180 – 315	Standard version
L99	Wire-lattice pallet	56 – 160	180	56 – 180	–	–	–
Notes on safety and commissioning/certification							
B00	Without notes on safety and commissioning Notice of renouncement is required from the customer	56 – 160	180 – 225	56 – 200	–	–	–
B01	Complete with one set of safety and commissioning notes per wire-lattice pallet	56 – 160	180	56 – 180	–	–	–
B02	Factory test certificate 2.3 acc. to EN 10 204	56 – 160	180 – 225	56 – 200	100 – 160	180 – 315	Standard version

Squirrel-cage motors
1MA · increased safety
EEx e II type of protection
Selection and ordering data

4

Aluminium housing

4/2 • 2-, 4-, 6-pole – 50 Hz

Cast iron housing

4/3 • 2-pole – 50 Hz
4/4 • 4-pole – 50 Hz
4/5 • 6-pole – 50 Hz

Special designs

4/6 • Windings and motor protection
4/6 • Paint finish
4/7 • Mechanical design
4/7 • Certification
4/7 • Marine version

1MA motors
Increased safety

Frame size	63 to 315
Output range	0.12 to 165 kW
Temp. class	T1 to T3
Temp. class F	Utilization acc. to B

Pressure-resistant 1MJ1/1MJ8 motors are available for the output range from 160 kW to 400 kW (see "1MJ squirrel-cage motors").
1MA8 motors are not longer available.

For special versions (other frequencies, outputs, coolant temperatures, installation altitudes, etc.), certification costs may be incurred.
For motor types that have not yet been acceptance tested by the PTB, changes may arise in the technical specifications.

Selection and ordering data

Rated output	Temperature classes	Size	Order No. / Order No. supplement for voltage and type of construction, see table below	Operating data at rated output: Rated speed	Efficiency η [1]	Power factor p.f.	Rated current at 380 V to 420 V	Rated torque	Starting torque (For direct-on-line starting as multiple of the rated torque)	Starting current	Stalling torque	t_E time (For temperature classes T1 T2)	t_E time (T3)	Torque class	Moment of inertia J	Weight (Type of constr. IM B 3)
kW				rpm	%		A	Nm				s	s	KL	kg m²	approx. kg
Temperature classes T1 to T3, IP55 degree of protection, temperature class F																**ATEX**
	3000 rpm, 2-pole, 50 Hz															
0.18	T1–T3	63 M	**1MA7 060–2BA . .**	2810	66	0.74	0.55	0.61	2.3	4.4	2.3	30	27	16	0.00018	4
0.25	T1–T3		**1MA7 063–2BA . .**	2800	68	0.85	0.70	0.85	2.2	4.4	2.3	19	16	16	0.00023	4
0.37	T1–T3	71 M	**1MA7 070–2BA . .**	2825	73	0.80	0.93	1.3	2.3	5.6	3.0	28	25	16	0.00035	6
0.55	T1–T3		**1MA7 073–2BA . .**	2785	72	0.84	1.4	1.9	3	5.2	2.6	18	13	16	0.00045	7
0.75	T1–T3	80 M	**1MA7 080–2BA . .**	2845	73	0.85	1.81	2.5	2.5	6.2	2.7	13	11	16	0.00085	9
1.1	T1–T3		**1MA7 083–2BA . .**	2855	79	0.85	2.5	3.7	2.8	6.4	3	12	10	16	0.0011	11
1.3	T1–T3	90 S	**1MA7 090–2BA . .**	2850	78	0.88	2.9	4.4	2.6	6.2	2.8	12	11	16	0.0015	13
1.85	T1–T3	90 L	**1MA7 096–2BA . .**	2860	81	0.88	3.95	6.2	2.8	7.2	2.8	9	8	16	0.002	16
2.5	T1–T3	100 L	**1MA7 106–2BA . .**	2865	82	0.87	5.3	8.3	2.6	7.4	2.8	9	8	16	0.0038	21
3.3	T1–T3	112 M	**1MA7 113–2BB . .**	2875	84	0.89	6.7	11	2.1	6.6	2.3	10	9	13	0.0055	27
4.6	T1–T3	132 S	**1MA7 130–2BB . .**	2920	83	0.90	9.2	15	1.9	6.8	2.5	15	13	13	0.016	53
5.5	T3		**1MA7 131–2BB . .** [2]	2925	86	0.92	10.6	18	2.2	7.7	2.7	15	13	13	0.021	44
6.5	T1, T2			2900	85	0.93	12.5	21	1.9	6.5	2.3	12	7	13	0.021	44
7.5	T3	160 M	**1MA7 163–2BB . .** [2]	2945	87.5	0.90	14.3	24	2.2	7.6	3.1	29	18	13	0.034	67
9.5	T1, T2			2920	87	0.91	18.1	31	1.7	6.0	2.4	24	–	13	0.034	67
10	T3	160 M	**1MA7 164–2BB . .** [2]	2940	88.5	0.92	18.6	33	2.1	7.6	2.9	23	12	13	0.04	72
13 •	T1, T2			2910	87.5	0.92	24.5	43	1.6	5.8	2.2	16	–	13	0.04	72
12.5	T3	160 L	**1MA7 166–2BB . .** [2]	2940	89	0.93	23.0	41	2.3	7.6	3	21	9	13	0.052	82
16 •	T1, T2			2910	87	0.93	30.0	53	1.8	5.8	2.3	15	–	13	0.052	82
	1500 rpm, 4-pole, 50 Hz															
0.12	T1–T3	63 M	**1MA7 060–4BB . .**	1375	55	0.66	0.52	0.83	1.9	2.6	1.9	35	30	13	0.0003	4
0.18	T1–T3		**1MA7 063–4BB . .**	1330	57	0.75	0.62	1.3	1.9	2.7	1.9	30	25	13	0.0004	4
0.25	T1–T3	71 M	**1MA7 070–4BB . .**	1310	60	0.77	0.80	1.8	1.9	3.1	1.9	50	40	13	0.0006	6
0.37	T3		**1MA7 073–4BB . .**	1355	67	0.74	1.10	2.6	1.9	3.7	2.1	35	29	13	0.00083	7
0.55	T1–T3	80 M	**1MA7 080–4BA . .**	1390	73	0.73	1.59	3.8	2.4	4.6	2.5	24	21	16	0.0015	9
0.75	T1–T3		**1MA7 083–4BA . .**	1395	73	0.75	2.05	5.1	2.6	4.8	2.6	19	16	16	0.0018	11
1	T1–T3	90 S	**1MA7 090–4BA . .**	1420	77	0.78	2.5	6.7	2.2	5.4	2.5	16	14	16	0.0028	13
1.35	T1–T3	90 L	**1MA7 096–4BA . .**	1415	78	0.82	3.1	9.1	2.3	5.9	2.5	15	13	16	0.0035	16
2	T1–T3	100 L	**1MA7 106–4BA . .**	1420	80	0.82	4.5	14	2.5	6.4	2.7	13	11	16	0.0048	20
2.5	T1–T3		**1MA7 107–4BA . .**	1415	81	0.83	5.5	17	2.6	6.4	2.7	12	10	16	0.0058	23
3.6	T1–T3	112 M	**1MA7 113–4BA . .**	1435	85	0.83	7.5	24	2.6	7.2	2.9	10	9	16	0.011	29
5	T1–T3	132 S	**1MA7 130–4BA . .**	1445	86	0.82	10.4	33	2.7	6.6	3.2	10	9	16	0.021	42
6.8	T1–T3	132 M	**1MA7 133–4BA . .**	1460	87	0.82	14.0	44	3	7.7	3.6	10	9	16	0.027	61
10	T1–T3	160 M	**1MA7 163–4BB . .**	1455	88	0.87	19.7	66	2.3	6.5	2.7	17	10	13	0.052	67
13.5	T1–T3	160 L	**1MA7 166–4BB . .**	1465	89	0.84	27	88	2.4	6.9	3	18	9	13	0.057	107
	1000 rpm, 6-pole, 50 Hz															
0.25	T1–T3	71 M	**1MA7 073–6BA . .**	850	63	0.72	0.81	2.8	2.2	3	2.1	130	70	16	0.0009	7
0.37	T1–T3	80 M	**1MA7 080–6BA . .**	920	68	0.7	1.14	3.6	2.3	3.6	2.4	60	55	16	0.0015	9
0.55	T1–T3		**1MA7 083–6BA . .**	930	69	0.67	1.75	5.6	2.4	4	2.4	30	27	16	0.0025	13
0.65	T1–T3	90 S	**1MA7 090–6BA . .**	915	70	0.75	1.8	6.8	2.3	3.9	2.4	35	30	16	0.0028	14
0.95	T1–T3	90 L	**1MA7 096–6BA . .**	910	72	0.75	2.6	9.9	2.3	4.1	2.4	22	19	16	0.0038	16
1.3	T1–T3	100 L	**1MA7 106–6BA . .**	935	77	0.73	3.35	13	2.4	4.8	2.5	26	26	16	0.0063	20
1.9	T1–T3	112 M	**1MA7 113–6BB . .**	940	79	0.76	4.7	19	2.3	5	2.5	19	16	13	0.011	24
2.6	T1–T3	132 S	**1MA7 130–6BB . .**	945	79	0.75	6.5	26	1.8	4.4	2.4	21	18	13	0.015	36
3.5	T1–T3	132 M	**1MA7 133–6BB . .**	955	81	0.72	9.0	35	2.3	5.1	2.8	16	13	13	0.019	41
4.8	T1–T3	132 M	**1MA7 134–6BB . .**	950	83	0.76	11.4	48	2.4	5.6	2.8	13	11	13	0.025	50
6.6	T1–T3	160 M	**1MA7 163–6BB . .**	960	85	0.75	14.9	65	2.7	6.4	3.1	18	9	13	0.041	70
9.7	T1–T3	160 L	**1MA7 166–6BB . .**	965	88	0.76	21.0	96	2.8	7.7	2.2	15	8	13	0.055	105

• Used acc. to class F.

Order No. supplements

Motor type	Penultimate position: Voltage identifier (50 Hz) 230 VΔ / 400 VY	400 VΔ / 690 VY	500 VY	500 VΔ	Final position: Type of construction identifier IM B 3	Price supplement IM B 5	IM V 1 With protective cover	IM B 14 With standard flange	IM B 14 With special flange	IM B 35
	For Δ -connection, overload protection with phase-failure protection must be provided.									
1MA7 060 to 1MA7 096	**1**	**6** [4]	**3** [5]	–	**0**	**1**	**4**	**2**	**3**	**6**
1MA7 106 to 1MA7 166	**1**	**6**	**3**	**5**	**0**	**1**	**4**	**2**	**3**	**6**

Other voltage and/or frequency, voltage identifier **"9"**.
Order codes are required for this purpose (see "Technical information", "Voltages, currents and frequencies").

For other types of construction, see "Technical information", "Types of construction".
For footnotes, see Page 4/3.

Rated output	Temperature classes	Size	Order No. / Order No. supplement for voltage and type of construction, see table below	Operating data at rated output: Rated speed	Efficiency η [1]	Power factor p.f.	Rated current at 380 V to 420 V	Rated torque	Starting torque (For direct-on-line starting as multiple of the rated torque)	Starting current	Stalling torque	t_E time (For temperature classes T1 T2)	T3	Torque class	Moment of inertia J	Weight / Type of constr. IM B 3
kW				rpm	%		A	Nm				s	s	KL	kg m²	approx. kg
Temperature classes T1 to T3, IP55 degree of protection, temperature class F																**ATEX**
	3000 rpm, 2-pole, 50 Hz															
2.5	T1–T3	100 L	**1MA6 106–2BA . .**	2865	82	0.87	5.3	8.3	2.6	7.4	2.8	9	8	16	0.0038	34
3.3	T1–T3	112 M	**1MA6 113–2BB . .**	2875	84	0.89	6.7	11	2.1	6.6	2.3	10	9	13	0.0055	43
4.6	T1–T3	132 S	**1MA6 130–2BB . .**	2920	83	0.90	9.2	15	1.9	6.8	2.5	15	13	13	0.016	53
5.5	T3	132 S	**1MA6 131–2BB . .** [2]	2925	86	0.92	10.6	18	2.2	7.7	2.7	15	13	13	0.021	58
6.5	T1,T2	132 S		2900	85	0.93	12.5	21	1.9	6.5	2.3	12	7	13	0.021	58
7.5	T3	160 M	**1MA6 163–2BB . .** [2]	2945	87.5	0.90	14.3	24	2.2	7.6	3.1	29	18	13	0.034	96
9.5	T1,T2	160 M		2920	87	0.91	18.1	31	1.7	6.0	2.4	24	–	13	0.034	96
10	T3	160 M	**1MA6 164–2BB . .** [2]	2940	88.5	0.92	18.6	33	2.1	7.6	2.9	23	12	13	0.04	105
13 ●	T1,T2	160 M		2910	87.5	0.92	24.5	43	1.6	5.8	2.2	16	–	13	0.04	105
12.5	T3	160 L	**1MA6 166–2BB . .** [2]	2940	89	0.93	23.0	41	2.3	7.6	3.0	21	9	13	0.052	115
16 ●	T1,T2	160 L		2910	87	0.93	30.0	53	1.8	5.8	2.3	15	–	13	0.052	115
15	T3	180 M	**1MA6 183–2BC . .**	2955	92	0.87	29	49	2	6.9	3.3	30	14	10	0.077	170
19	T1,T2			2935	91.1	0.88	36.5	62	1.6	5.5	2.6	24		10		
20	T3	200 L	**1MA6 206–2BC . .**	2950	91.2	0.87	49	64	1.9	6	2.9	35	14	10	0.14	245
25	T1,T2			2960	90.6	0.86	39	81	1.5	4.8	2.3	28		10		
24	T3		**1MA6 207–2BC . .**	2965	92	0.87	46	77	2	6.4	3	35	10	10	0.16	246
31	T1,T2			2950	91.4	0.88	60	100	1.5	4.9	2.3	26		10		
28	T3	225 M	**1MA6 223–2BC . .**	2970	93.6	0.9	51	90	1.8	6.4	2.7	30	13	10	0.24	310
38	T1,T2		**1MA6 223–2AC . .**	2970	93.9	0.89	69 [3]	122	1.8	7	2.7	16		10		
36	T3	250 M	**1MA6 253–2BC . .**	2975	93.5	0.91	64	116	1.5	6.6	2.7	30	11	10	0.45	415
47	T1,T2		**1MA6 253–2AC . .**	2975	93.9	0.9	85	151	1.5	6.5	2.7	18		10		
47	T3	280 S	**1MA6 280–2BD . .**	2983	94.5	0.9	84	150	1.5	7.1	2.9	30	23	7	0.79	570
64	T1,T2	280 S	**1MA6 280–2AD . .**	2980	94.3	0.89	115	205	1.5	7.8	2.9	19		7		
58	T3	280 M	**1MA6 283–2BD . .**	2982	94.7	0.91	104	186	1.5	7.2	2.8	27	11	7	0.92	610
76	T1,T2	280 M	**1MA6 283–2AD . .**	2978	94.8	0.9	134	244	1.5	7.5	2.8	15		7		
68	T3	315 S	**1MA6 310–2BD . .**	2985	94	0.91	120	218	1.4	7.1	2.8	50	21	7	1.3	790
95	T1,T2	315 S	**1MA6 310–2AD . .**	2985	94.6	0.9	169	304	1.5	7.3	2.9	30		7		
80	T3	315 M	**1MA6 313–2BD . .**	2985	94.8	0.91	142	256	1.6	7	2.8	40	19	7	1.5	850
112	T1,T2	315 M	**1MA6 313–2AD . .**	2985	94.8	0.91	198 [3]	358	1.4	7.5	2.7	21		7		
100	T3	315 L	**1MA6 316–2BD . .**	2984	94.9	0.92	174	320	1.4	6.8	2.7	40	11	7	1.8	990
135	T1,T2		**1MA6 316–2AD . .**	2984	95.2	0.91	234	432	1.6	7.4	2.9	17		7		
125	T3		**1MA6 317–2BD . .**	2985	95.5	0.91	214	400	1.5	7.3	2.5	30	7 ■	7	2.3	1100
165	T1,T2		**1MA6 317–2AD . .**	2986	95.7	0.91	280	528	1.8	9.3	2.9	7 ■		7		

● Used acc. to class F. ■ VIK is not possible.

Order No. supplements

Motor type	Penultimate position: Voltage identifier (50 Hz) 230 VΔ / 400 VY	400 VΔ / 690 VY	500 VY	500 VΔ	Final position: Type of construction identifier: IM B 3	Price supplement IM B 5	IM V 1 With protective cover	IM B 14 With standard flange	IM B 14 With special flange	IM B 35
	For Δ-connection, overload protection with phase-failure protection must be provided.									
1MA6 106 to 1MA6 166	**1**	**6**	**3**	**5**	**0**	**1**	**4**	**2**	**3**	**6**
1MA6 183 to 1MA6 313	**1**	**6**	**3**	**5**	**0**	**1**	**4**	**–**	**–**	**6**
1MA6 316 to 1MA6 317	**–**	**6**	**3**	**5**	**0**	**–**	**4**	**–**	**–**	**6**

Other voltage and/or frequency, voltage identifier **"9"**.
Order codes are required for this purpose (see "Technical information", "Voltages, currents and frequencies").

For other types of construction, see "Technical information", "Types of construction".

1) With reference to 75 °C.
2) For voltage identifier "9", separate versions for T1, T2 and T3. For order code A11, only possible for one power output in each case.
3) For connection to 230 V, parallel supply cables are required.
4) Not possible for 1MA7 06 motors.
5) Not possible for 1MA7 060-4 motors.

Selection and ordering data

Rated output	Temperature classes	Size	Order No. / Order No. supplement for voltage and type of construction, see table below	Operating data at rated output: Rated speed	Efficiency η [1]	Power factor p.f.	Rated current at 380 V to 420 V	Rated torque	Starting torque	Starting current	Stalling torque	t_E time For temperature classes T1 T2	T3	Torque class	Moment of inertia J	Weight Type of constr. IM B 3
									For direct-on-line starting as multiple of the rated							
kW				rpm	%		A	Nm				s	s	KL	kg m²	approx. kg
Temperature classes T1 to T3, IP55 degree of protection, temperature class F																**ATEX**
	1500 rpm, 4-pole, 50 Hz															
2	T1–T3	100 L	**1MA6 106–4BA . .**	1420	80	0.82	4.5	14	2.5	6.4	2.7	13	11	16	0.0048	33
2.5	T1–T3	100 L	**1MA6 107–4BA . .**	1415	81	0.83	5.5	17	2.6	6.4	2.7	12	10	16	0.0058	36
3.6	T1–T3	112 M	**1MA6 113–4BA . .**	1435	85	0.83	7.5	24	2.6	7.2	2.9	10	9	16	0.011	45
5	T1–T3	132 S	**1MA6 130–4BA . .**	1445	86	0.82	10.4	33	2.7	6.6	3.2	10	9	16	0.021	55
6.8	T1–T3	132 M	**1MA6 133–4BA . .**	1460	87	0.82	14.0	44	3.0	7.7	3.6	10	9	16	0.027	62
10	T1–T3	160 M	**1MA6 163–4BB . .**	1455	88	0.87	19.7	66	2.3	6.5	2.7	17	10	13	0.052	100
13.5	T1–T3	160 L	**1MA6 166–4BB . .**	1465	89	0.84	27	88	2.4	6.9	3.0	18	9	13	0.057	114
15	T3	180 M	**1MA6 183–4BC . .**	1465	90.7	0.80	31	97	1.8	6.1	2.9	18	11	10	0.13	165
17	T1,T2	180 M		1460	90.0	0.82	35.5	111	1.6	5.3	2.4	13		10		
17.5	T3	180 L	**1MA6 186–4BC . .**	1475	91.6	0.80	36	114	1.8	6.4	3	16	11	10	0.15	177
20	T1,T2	180 L		1465	90.6	0.82	41 [2])	130	1.6	5.6	2.6	13		10		
24	T3	200 L	**1MA6 207–4BC . .**	1480	92.5	0.82	47.5	155	2.2	7.9	3.1	20	11	10	0.32	280
27	T1,T2			1475	92.4	0.84	53	175	1.9	7.1	2.7	19		10		
30	T3	225 S	**1MA6 220–4BC . .**	1481	93.3	0.83	59	193	1.6	6.7	2.7	13	13	10	0.44	300
33	T1,T2	225 S		1480	93.1	0.84	64 [2])	213	1.4	6.2	2.5	11		10		
36	T3	225 M	**1MA6 223–4BC . .**	1484	93.8	0.84	70 [2])	232	1.7	6.9	2.8	12	12	10	0.52	330
40	T1,T2	225 M		1480	93.6	0.85	77 [2])	258	1.5	6.2	2.5	10		10		
44	T3	250 M	**1MA6 253–4BC . .**	1485	94	0.85	83	283	1.7	7.3	2.5	18	11	10	0.79	435
50	T1,T2			1485	93.8	0.86	94	322	1.5	6.4	2.1	15		10		
58	T3	280 S	**1MA6 280–4BC . .**	1488	94.6	0.84	111	372	1.7	6.3	2.5	30	7 ■	10	1.4	610
68	T1,T2	280 S		1485	94.5	0.85	131	437	1.5	5.3	2.1	23		10		
70	T3	280 M	**1MA6 283–4BC . .**	1488	94.8	0.85	130	449	1.7	7	2.5	26	6 ■	10	1.6	660
80	T1,T2	280 M		1485	94.8	0.87	150 [2])	514	1.5	6	2.2	20		10		
84	T3	315 S	**1MA6 310–4BD . .**	1492	95.4	0.84	158	538	1.7	7.7	2.8	28	8	7	2.2	830
100	T1,T2	315 S		1490	95.3	0.85	188	641	1.4	6.5	2.4	24		7		
100	T3	315 M	**1MA6 313–4BD . .**	1492	95.8	0.85	185	640	1.6	7.2	2.5	29	7 ■	7	2.7	910
120	T1,T2	315 M		1488	95.7	0.86	222 [2])	770	1.3	6	2.1	24		7		
115	T3	315 L	**1MA6 316–4BD . .**	1490	95.6	0.86	214	740	1.7	7.5	2.5	28	5 ■	7	3.2	1060
135	T1,T2			1488	95.5	0.86	248	868	1.4	6.4	2.1	21		7		
135	T3		**1MA6 317–4BD . .**	1492	95.8	0.86	245	868	1.7	7.8	2.8	26	7	7	4.2	1200
165	T1,T2			1485	95.8	0.87	305	1061	1.5	6.3	2.3	17		7		

■ VIK is not possible.

Order No. supplements

Motor type	Penultimate position: Voltage identifier 50 Hz: 230 VΔ / 400 VY	400 VΔ / 690 VY	500 VY	500 VΔ	Final position: Type of construction identifier: IM B 3	Price supplement IM B 5	IM V 1 With protective cover	IM B 14 With standard flange	IM B 14 With special flange	IM B 35
	For Δ -connection, overload protection with phase-failure protection must be provided.									
1MA6 106 to 1MA6 166	**1**	**6**	**3**	**5**	**0**	**1**	**4**	**2**	**3**	**6**
1MA6 183 to 1MA6 313	**1**	**6**	**3**	**5**	**0**	**1**	**4**	**–**	**–**	**6**
1MA6 316 to 1MA6 317	**–**	**6**	**3**	**5**	**0**	**–**	**4**	**–**	**–**	**6**

Other voltage and/or frequency, voltage identifier **"9"**.
Order codes are required for this purpose (see "Technical information", "Voltages, currents and frequencies").

For other types of construction, see "Technical information", "Types of construction".

1) With reference to 75 °C.

2) For connection to 230 V, parallel supply cables are required (see "Technical information", "Connections, circuits and terminal blocks").

Rated output	Temperature classes	Size	Order No. / Order No. supplement for voltage and type of construction, see table below	Operating data at rated output: Rated speed	Efficiency η [1]	Power factor p.f.	Rated current at 380 V to 420 V	Rated torque	Starting torque (For direct-on-line starting as multiple of the rated torque)	Starting current	Stalling torque	t_E time (For temperature classes) T1 T2	T3	Torque class	Moment of inertia J	Weight approx. (Type of constr. IM B 3)
kW				rpm	%		A	Nm				s	s	KL	kg m²	kg
Temperature classes T1 to T3, IP55 degree of protection, temperature class F																**ATEX**
	1000 rpm, 6-pole, 50 Hz															
1.3	T1–T3	100 L	**1MA6 106–6BA . .**	935	77	0.73	3.35	13	2.4	4.8	2.5	26	26	16	0.0063	33
1.9	T1–T3	112 M	**1MA6 113–6BB . .**	940	79	0.76	4.7	19	2.3	5.0	2.5	19	16	13	0.011	40
2.6	T1–T3	132 S	**1MA6 130–6BB . .**	945	79	0.75	6.5	26	1.8	4.4	2.4	21	18	13	0.015	50
3.5	T1–T3	132 M	**1MA6 133–6BB . .**	955	81	0.72	9.0	35	2.3	5.1	2.8	16	13	13	0.019	57
4.8	T1–T3	132 M	**1MA6 134–6BB . .**	950	83	0.76	11.4	48	2.4	5.6	2.8	13	11	13	0.025	66
6.6	T1–T3	160 M	**1MA6 163–6BB . .**	960	85	0.75	14.9	65	2.7	6.4	3.1	18	9	13	0.041	103
9.7	T1–T3	160 L	**1MA6 166–6BB . .**	965	88	0.76	21.0	96	2.8	7.7	2.2	15	8	13	0.055	122
13.2	T1–T3	180 L	**1MA6 186–6BC . .**	975	89.6	0.78	28.5	129	1.6	5.4	2.5	22	18	10	0.20	177
16.5	T1–T3	200 L	**1MA6 206–6BC . .**	980	90.5	0.81	34.5	161	1.7	5.4	2.6	23	19	10	0.29	220
20	T1–T3		**1MA6 207–6BC . .**	980	90.8	0.82	41	195	1.7	5.6	2.6	22	17	10	0.33	235
27	T1–T3	225 M	**1MA6 223–6BC . .**	975	92.5	0.82	54	263	1.6	5.6	2.5	15	15	10	0.57	305
33	T1–T3	250 M	**1MA6 253–6BC . .**	985	93	0.83	66	320	1.6	5.3	2.4	16	16	10	0.89	410
40	T1–T3	280 S	**1MA6 280–6BC . .**	990	93.3	0.85	77	386	1.5	6.2	2.6	13	13	10	1.3	540
46	T3	280 M	**1MA6 283–6BC . .**	988	93.5	0.86	86	445	1.6	6.5	2.5		12	10	1.5	580
50	T1,T2	280 M		987	93.3	0.86	96	484	1.5	5.8	2.3	14		10		
64	T3	315 S	**1MA6 310–6BC . .**	991	94.3	0.84	124	617	1.7	6.2	2.5		14	10	2.4	770
68	T1,T2	315 S		990	94.2	0.85	131	656	1.6	5.9	2.3	22		10		
76	T3	315 M	**1MA6 313–6BC . .**	991	94.6	0.84	146	732	1.7	6.4	2.5		8	10	2.9	830
82	T1,T2	315 M		990	94.5	0.84	158	791	1.6	5.9	2.3	18		10		
92	T3	315 L	**1MA6 316–6BC . .**	991	95	0.85	172	887	1.7	6.5	2.5		9	10	3.5	970
98	T1,T2			990	94.8	0.85	185	945	1.6	6.1	2.3	20		10		
110	T3		**1MA6 317–6BC . .**	991	95.2	0.84	210	1060	1.7	6.8	2.5		6 ■	10	4.3	1060
120	T1,T2			990	95	0.85	230	1160	1.6	6.2	2.3	16		10		
125	T3		**1MA6 318–6BC . .**	991	95.2	0.86	220 ●	1210	1.6	7	2.5		6 ■	10	4.9	1100
135	T1,T2			990	95	0.86	240 ●	1300	1.5	6.5	2.3	17		10		

● Certified for 400 V rated voltage only.

■ VIK is not possible.

Order No. supplements

Motor type	Penultimate position: Voltage identifier (50 Hz) 230 VΔ / 400 VY	400 VΔ / 690 VY	500 VY	500 VΔ	Final position: Type of construction identifier IM B 3	Price supplement IM B 5	IM V 1 With protective cover	IM B 14 With standard flange	IM B 14 With special flange	IM B 35
	For Δ -connection, overload protection with phase-failure protection must be provided.									
1MA6 106 to 1MA6 166	**1**	**6**	**3**	**5**	**0**	**1**	**4**	**2**	**3**	**6**
1MA6 183 to 1MA6 313	**1**	**6**	**3**	**5**	**0**	**1**	**4**	**–**	**–**	**6**
1MA6 316 to 1MA6 317	**–**	**6**	**3**	**5**	**0**	**–**	**4**	**–**	**–**	**6**

Other voltage and/or frequency, voltage identifier **"9"**.
Order codes are required for this purpose (see "Technical information", "Voltages, currents and frequencies").

For other types of construction, see "Technical information", "Types of construction".

1) With reference to 75 °C.

Order codes for special versions

Additional order suffix **–Z** with order code	Special designs	Motor type – Size Aluminium housing 1MA7	 Cast iron housing 1MA6
Windings and motor protection			
Y52 • and required power CT ... °C or AH... m above sea level	Used acc. to class F	63 – 160 Please enquire. There may be charges for certification.	100 – 315 Please enquire. There may be charges for certification.
A11	Motor protection by means of PTC thermistor with 3 embedded temperature sensors for shutdown [1])	63 – 160	100 – 315 [2])
A12	Motor protection by means of PTC thermistor with 6 embedded temperature sensors for alarm and shutdown [1])	63 – 160	100 – 315 [2])
Paint finish			
	Standard paintwork in RAL 7030 stone grey	–	225 – 315 standard design
K26	Special paintwork in RAL 7030 stone grey	Standard design (without order code)	225 – 315, standard design for 100 to 200 (without order code)
M16	Special paintwork in RAL 1002 sand yellow	63 – 160	100 – 200 For 225 – 315 with order code **Y54** and special paintwork RAL . . .
M17	Special paintwork in RAL 1013 pearl white		
M18	Special paintwork in RAL 3000 flame red		
K27	Special paintwork in RAL 6011 mignonette green		
M19	Special paintwork in RAL 6021 pale green		
M20	Special paintwork in RAL 7001 silver grey		
K28	Special paintwork in RAL 7031 bluish grey		
L42	Special paintwork in RAL 7032 pebble grey		
M21	Special paintwork in RAL 7035 light grey		
M22	Special paintwork in RAL 9001 cream		
M23	Special paintwork in RAL 9002 grey white		
L43	Special paintwork in RAL 9005 jet black		
Y54 • And special paintwork RAL....	Special paintwork in other colors: RAL 1015, 1019, 2003, 2004, 3007, 5007, 5009, 5010, 5012, 5015, 5017, 5018, 5019, 6019, 7000, 7004, 7011, 7016, 7022, 7033	63 – 160	100 – 315
Y53 • And standard paintwork RAL....	Standard paintwork in other colors	–	225 – 315
K23	Unpainted (only cast iron parts primed)	63 – 160	100 – 315
K24	Unpainted, only primed	63 – 160	100 – 200

RAL No.	Name of color	RAL No.	Name of color
1015	Light ivory	5017	Traffic blue
1019	Grey beige	5018	Turquoise blue
2003	Pastel orange	5019	Capri blue
2004	Pure orange	6019	Pastel green
3007	Wine red	7000	Squirrel grey
5007	Black blue	7004	Signal grey
5009	Azure blue	7011	Iron grey
5010	Gentian blue	7016	Anthracite grey
5012	Light blue	7022	Umbra grey
5015	Sky blue	7033	Cement grey

• Additional plain text required.

1) For appropriate certified 3RN1 tripping unit, see Catalog LV 10.

2) Not permitted as sole protection from size 180 upwards; motor protection contactor required.

Order codes for special versions

Additional order suffix **–Z** with order code	Special designs	Motor type – Size Aluminium housing 1MA7	 Cast iron housing 1MA6
Mechanical design			
K09	Terminal box on RHS (view onto drive end)	80 – 160	100 – 315
K10	Terminal box on LHS (view onto drive end)	80 – 160	100 – 315
K83	Rotation of terminal box by 90°, inserted from drive end	63 – 160	100 – 315
K84	Rotation of terminal box by 90°, inserted from non-drive end	63 – 160	100 – 315
K85	Rotation of terminal box by 180°	63 – 160	100 – 315
K01	Vibrational severity grade R	63 – 160	100 – 315
K16	Second standard shaft end [1])	63 – 160	100 – 315
K17	Radial sealing ring on drive end with flange types [2])	63 – 160	100 – 315
K20	Bearing for increased cantilever forces [3])	100 – 160	100 – 315
K40	Regreasing device	100 – 160	100 – 250 standard version from 280 upwards
L04	Located bearing non-drive end	63 – 132, 160 standard version	100 – 132, 160 standard version
K94	Located bearing drive end	63 – 160	100 – 200
D01	CCC China Compulsory Certification	63 – 90 [4])	–
K30	VIK design [5])	63 – 160	100 – 315
K31	Extra rating plate, loose	63 – 160	100 – 315
Y82 •	Extra rating plate	63 – 160	100 – 315
And order codes			
K37	Low noise version for 2-pole motors with clockwise rotation [6])	132 – 160	132 – 315
K38	Low noise version for 2-pole motors with anti-clockwise rotation [6])	132 – 160	132 – 315
K45	Anti-condensation heating for 230 V	–	225 – 315
K46	Anti-condensation heating for 115 V	–	225 – 315
L99	Wire-lattice pallet	63 – 160	100 – 180
Certification			
B02	Factory test certificate 2.3 acc. to EN 10 204	63 – 160	100 – 315
Marine version – "Operation below deck" [7]) [8])			
E00	Without certificate acc. to ABS 50 °C/CCS 45 °C/ RINA 45 °C Temperature class F used acc. to F	63 – 160	100 – 315
E11	Certified according to GL (Germanischer Lloyd) Germany, CT 45 °C, Temperature class F used acc. to F	63 – 160	100 – 315
E21	Certified according to LRS (Lloyds Register of Shipping) Great Britain, CT 45 °C, Temperature class F used acc. to F	63 – 160	100 – 315
E31	Certified according to BV (Bureau Veritas) France, CT 45 °C, Temperature class F used acc. to F	63 – 160	100 – 315
E51	Certified according to DNV (Det Norske Veritas) Norway, CT 45 °C, Temperature class F used acc. to F	63 – 160	100 – 315

• Additional plain text required.

1) Motors of size 180 M in vertical designs for version with second shaft end are available on request.
Low noise version (2-pole) not possible from size 132 S to 315 L.
Design with cover not available.

2) Not possible for size IM V 3, only for 4-pole to 6-pole motors for size 180 M upwards.

3) Not possible for 2-pole 1MA6 motors, size 315L with vertical design;
Vibrational severity grade R on request for 1MA6 motors from size 225 M upwards.

4) The following motors require a CCC certificate:
– 2-pole motors: ≤ 2.2 kW
– 4-pole motors: ≤ 1.1 kW
– 6-pole motors: ≤ 0.75 kW
– 8-pole motors: ≤ 0.55 kW

5) For sizes 315 S to 315 L, low noise version also required.

6) 1MA6/1MA7 motors are up to 80 mm longer than normal.
Second shaft end not possible.

7) Works test certificate 2.3 to EN 10204 is also supplied (does not apply to Order Code **E00**). Individual acceptance test must be specified in plain text on ordering if required (price supplement).

8) For 1MA motors of class F used acc. to class B, derating may be necessary.

Notes

Squirrel-cage motors
1MJ · explosion-proof enclosure EEx de IIC type of protection Selection and ordering data

5/2 • 2-pole – 50 Hz
5/3 • 4-pole – 50 Hz
5/4 • 6-pole – 50 Hz
5/5 • 8-pole – 50 Hz

Special designs
5/6 • Motor protection
5/6 • Paint finish
5/7 • Mechanical design
5/7 • Certification
5/7 • Marine version

5

1MJ motors
Explosion-proof enclosure

Frame size	71 to 450
Output range	0.25 to 900 kW
Temp. class	T1 to T4
Temp. class F	Utilization acc. to B
Converter compatible	Voltage peak times $t_s > 0.1\ \mu s$ at $U \leq 500$ V

The motors comply with the highest explosion group IIC.

Selection and ordering data

Rated output	Size	Order No.	Operating data at rated output: Rated speed	Effi-ciency η	Power factor p.f.	Rated cur-rent at 400 V	Rated torque	Starting torque (For direct-on-line starting as multiple of the rated torque)	Starting current (multiple of the rated current)	Stalling torque (multiple of the rated torque)	Torque class	Moment of inertia J	Weight Type of constr. IM B 3 approx.
		Order No. supplement for voltage and type of construction, see table below											
kW			rpm	%		A	Nm				KL	kg m²	kg
Temperature classes T1 to T4, IP55 degree of protection, temperature class F													**ATEX**
	3000 rpm, 2-pole, 50 Hz												
0.37	71 M	**1MJ6 070–2CA . .**	2750	67	0.81	0.98	1.3	2.3	4.3	2.3	16	0.00035	19
0.55		**1MJ6 073–2CA . .**	2790	71	0.81	1.38	1.9	2.5	5.3	2.6	16	0.00045	20
0.75	80 M	**1MJ6 080–2CA . .**	2840	72	0.86	1.75	2.5	2.4	6.3	2.3	16	0.00085	24
1.1		**1MJ6 083–2CA . .**	2835	74	0.87	2.45	3.7	2.6	6.3	2.3	16	0.0011	26
1.5	90 L	**1MJ6 096–2CA . .**	2850	78	0.84	3.3	5.0	2.5	6.7	2.5	16	0.0015	32
2.2		**1MJ6 097–2CA . .**	2860	80	0.86	4.6	7.4	2.8	7.1	2.8	16	0.0020	35
3	100 L	**1MJ6 106–2CA . .**	2885	82	0.85	6.2	9.9	2.8	7.7	3.0	16	0.0038	44
4	112 M	**1MJ6 113–2CA . .**	2895	84	0.88	7.8	13	2.4	7.6	2.8	16	0.0055	57
5.5	132 S	**1MJ6 130–2CA . .**	2925	85	0.89	10.5	18	2.0	5.9	2.6	16	0.015	75
7.5		**1MJ6 131–2CA . .**	2930	87	0.89	14	24	2.3	6.9	2.6	16	0.019	82
11	160 M	**1MJ6 163–2CA . .**	2940	88	0.88	20.5	36	2.1	6.5	2.6	16	0.034	123
15	160 M	**1MJ6 164–2CA . .**	2940	89	0.91	26.5	49	2.2	6.6	3.1	16	0.043	134
18.5	160 L	**1MJ6 166–2CA . .**	2940	91	0.91	32.5	60	2.4	7.0	3.3	16	0.051	161
22	180 M	**1MJ6 183–2CA . .**	2940	92	0.88	39	71	2.5	6.9	3.2	16	0.077	175
30	200 L	**1MJ6 206–2CA . .**	2940	92.3	0.89	53	97	2.4	6.5	2.8	16	0.14	250
37		**1MJ6 207–2CA . .**	2945	92.8	0.90	64	120	2.4	7.7	2.8	16	0.16	266
45	225 M	**1MJ7 223–2CB . .**	2955	93.9	0.90	77 [1]	145	2.3	6.9	2.7	13	0.24	335
55	250 M	**1MJ7 253–2CB . .**	2965	93.7	0.90	94	177	2.1	6.9	2.8	13	0.45	445
75	280 S	**1MJ7 280–2CC . .**	2975	94.7	0.90	128 [1]	241	1.9	7.0	2.7	10	0.79	600
90	280 M	**1MJ7 283–2CC . .**	2975	95.1	0.91	150 [1]	289	2.0	7.0	2.7	10	0.92	640
110	315 S	**1MJ7 310–2CC . .**	2980	94.8	0.90	186 [1]	353	1.8	7.0	2.8	10	1.3	840
132	315 M	**1MJ7 313–2CC . .**	2980	95.1	0.90	225 [1]	423	1.9	7.0	2.8	10	1.5	900
160	315 M	**1MJ8 313–2AB . .**	2980	95.7	0.88	280	513	2.2	6.9	2.5	13	2.3	1100
200	315 L	**1MJ8 316–2AB . .**	2980	96.2	0.89	335	641	2.3	6.9	2.6	13	2.8	1200
250	355	**1MJ8 353–2AC . .**	2980	96.2	0.89	423 [2]	801	2.1	6.7	2.6	10	3.5	1700
315		**1MJ8 356–2AC . .**	2980	96.6	0.89	530 [2]	1009	2.1	6.7	2.6	10	4.2	2000
355	355	**1MJ1 355–2AD . .**	2978	96.5	0.91	580	1138	1.0	6.4	2.7	7	4.3	2400
400		**1MJ1 357–2AD . .**	2978	96.6	0.91	655	1282	0.95	6.1	2.6	7	4.3	2400
450	400	**1MJ1 403–2AE . .**	2984	96.7	0.90	745	1440	0.8	6.2	2.8	5	6.0	2800
500		**1MJ1 405–2AE . .**	2982	96.8	0.91	820	1601	0.8	5.9	2.55	5	7.0	3000
560		**1MJ1 407–2AE . .**	2983	97.0	0.91	915	1792	0.85	6.2	2.7	5	7.0	3000
630	450	**1MJ1 453–2AE . .**	2986	96.9	0.91	600 •	2014	0.75	6.2	2.7	5	11.0	4000
710		**1MJ1 455–2AE . .**	2986	97.0	0.91	670 •	2270	0.8	6.3	2.8	5	11.0	4000
800		**1MJ1 457–2AE . .**	2986	97.1	0.91	760 •	2557	0.8	6.3	2.8	5	13.0	4200
900		**1MJ1 458–2AE . .**	2985	97.2	0.91	850 •	2879	0.85	6.4	2.7	5	13.0	4200

• Rated current at 690 V.

Order No. supplements

Motor type	Penultimate position: Voltage identifier (50 Hz) 230 VΔ / 400 VY	400 VΔ / 690 VY	500 VY	500 VΔ	Final position: Type of construction identifier IM B 3	Price supplement IM B 5	IM V 1 With protective cover	IM B 14 With standard flange	IM B 14 With special flange	IM B 35
1MJ6 070 to 1MJ6 097	**1**	**6**	**3**	**–**	**0**	**1**	**4**	**2**	**3** [3]	**6**
1MJ6 106 to 1MJ6 166	**1**	**6**	**3**	**5**	**0**	**1**	**4**	**–**	**–**	**6**
1MJ6 183 to 1MJ6 207	**1**	**6**	**3**	**5**	**0**	**1**	**4**	**–**	**–**	**6**
1MJ7 223 to 1MJ7 313	**1**	**6**	**3**	**5**	**0**	**1**	**4**	**–**	**–**	**6**
1MJ8 313 to 1MJ8 316	**–**	**6**	**3**	**5**	**0**	**1**	**4**	**–**	**–**	**6**
1MJ8 353 to 1MJ8 356	**–**	**6**	**3**	**5**	**0**	**–**	**4**	**–**	**–**	**6**
1MJ1 355 to 1MJ1 458	**–**	**6**	**3**	**5**	**0**	**–**	**4**	**–**	**–**	**6**

Other voltage and/or frequency, voltage identifier **"9"**.
Order codes are required for this purpose
(see "Technical information", "Voltages, currents and frequencies").

For other types of construction, see "Technical information", "Types of construction".

1) For connection to 230 V, parallel supply cables are required (see "Technical information", "Connections, circuits and terminal blocks").

2) The motors have two terminal blocks.

3) Only up to 1MJ6 083.

Rated output	Size	Order No. / Order No. supplement for voltage and type of construction, see table below	Operating data at rated output: Rated speed	Effi-ciency η	Power factor p.f.	Rated current at 400 V	Rated torque	Starting torque (For direct-on-line starting as multiple of the rated) torque	Starting current current	Stalling torque torque	Torque class	Moment of inertia J	Weight Type of constr. IM B 3 approx.
kW			rpm	%		A	Nm				KL	kg m²	kg
Temperature classes T1 to T4, IP55 degree of protection, temperature class F													**ATEX**
	1500 rpm, 4-pole, 50 Hz												
0.25	71 M	**1MJ6 070–4CB . .**	1325	60	0.77	0.78	1.8	1.8	3.2	1.8	13	0.0006	20
0.37		**1MJ6 073–4CB . .**	1375	64	0.74	1.13	2.5	2	3.6	2	13	0.0008	21
0.55	80 M	**1MJ6 080–4CA . .**	1395	71	0.79	1.42	3.7	2.3	4.7	2.4	16	0.0015	24
0.75		**1MJ6 083–4CA . .**	1395	73	0.79	1.88	5.1	2.5	5	2.6	16	0.0018	26
1.1	90 L	**1MJ6 096–4CA . .**	1410	73	0.81	2.7	7.5	2.1	4.9	2.5	16	0.0028	32
1.5		**1MJ6 097–4CA . .**	1420	77	0.8	3.5	10	2.2	5.8	2.6	16	0.0035	35
2.2	100 L	**1MJ6 106–4CA . .**	1420	78	0.8	5.1	15	2.2	6	2.6	16	0.0048	44
3		**1MJ6 107–4CA . .**	1415	80	0.82	6.6	20	2.7	6.4	3	16	0.0058	47
4	112 M	**1MJ6 113–4CA . .**	1435	83	0.82	8.5	27	2.8	7.2	3	16	0.011	58
5.5	132 S	**1MJ6 130–4CA . .**	1450	86	0.83	11.1	36	2.4	6.9	3.3	16	0.018	76
7.5	132 M	**1MJ6 133–4CA . .**	1450	86	0.84	15	49	2.7	7.7	3.3	16	0.024	85
11	160 M	**1MJ6 163–4CA . .**	1455	87	0.85	21.5	72	2.4	6.6	2.9	16	0.040	128
15	160 L	**1MJ6 166–4CA . .**	1455	89	0.85	28.5	98	2.8	7.4	3.2	16	0.052	158
18.5	180 M	**1MJ6 183–4CA . .**	1460	90.5	0.84	35	121	2.3	7.1	3	16	0.13	175
22	180 L	**1MJ6 186–4CA . .**	1460	91.2	0.85	41	144	2.3	7.1	3	16	0.15	189
30	200 L	**1MJ6 207–4CA . .**	1465	91.8	0.86	55	196	2.6	7.4	3.2	16	0.24	247
37	225 S	**1MJ7 220–4CA . .**	1475	93	0.86	67 [1]	240	2.5	7	3.1	16	0.44	325
45	225 M	**1MJ7 223–4CA . .**	1475	93.4	0.87	80 [1]	292	2.6	7	3.2	16	0.52	355
55	250 M	**1MJ7 253–4CA . .**	1480	94	0.87	97 [1]	355	2.6	6.7	2.5	16	0.79	465
75	280 S	**1MJ7 280–4CA . .**	1485	94.7	0.86	132 [1]	482	2.5	6.7	2.7	16	1.4	630
90	280 M	**1MJ7 283–4CA . .**	1485	95	0.86	160 [1]	579	2.5	6.8	2.8	16	1.6	680
110	315 S	**1MJ7 310–4CA . .**	1488	94.8	0.86	194 [1]	706	2.5	7.0	2.7	16	2.2	870
132	315 M	**1MJ7 313–4CA . .**	1488	95.5	0.86	232 [1]	847	2.7	7.5	3	16	2.7	950
160	315 M	**1MJ8 313–4AC . .**	1485	95.6	0.86	285	1029	2.4	6.8	2.5	13	3.3	1120
200	315 L	**1MJ8 316–4AB . .**	1485	95.7	0.85	355	1286	2.5	6.9	2.4	13	4.0	1200
225	355	**1MJ8 353–4AC . .**	1485	96.2	0.85	400	1447	2.1	6.6	2.3	13	5.5	1800
250		**1MJ8 354–4AD . .**	1490	96.5	0.86	435 [2]	1602	1.2	6.5	2.4	7	6	1800
280		**1MJ8 356–4AC . .**	1485	96.3	0.85	495 [2]	1801	2.1	6.6	2.3	13	6.5	2100
315		**1MJ8 357–4AD . .**	1490	96.6	0.87	540 [2]	2019	1.2	6.5	2.4	7	7	2100
355	355	**1MJ1 353–4AD . .**	1491	96.6	0.86	620	2272	1.05	6.1	2.4	7	7.5	2500
400		**1MJ1 355–4AD . .**	1491	96.7	0.86	695	2560	1.05	6.0	2.35	7	9.0	2700
450		**1MJ1 357–4AD . .**	1491	96.8	0.86	785	2880	1.1	6.2	2.4	7	9.0	2700
500	400	**1MJ1 403–4AD . .**	1492	96.8	0.87	855 [3]	3200	1.1	6.2	2.6	7	13	3100
560		**1MJ1 405–4AD . .**	1492	96.9	0.88	950 [3]	3583	1.1	6.2	2.55	7	15	3300
630		**1MJ1 407–4AD . .**	1492	97.0	0.88	1070 [2] [3] [4]	4031	1.1	6.3	2.6	7	15	3300
710	450	**1MJ1 453–4AD . .**	1493	97.0	0.89	1190 [2] [3] [4]	4540	0.95	6.3	2.5	7	24.5	4300
800		**1MJ1 455–4AD . .**	1493	97.1	0.88	1355 [2] [3] [4]	5114	1.0	6.6	2.6	7	24.5	4300
900		**1MJ1 457–4AD . .**	1493	97.2	0.88	880 •	5755	1.05	6.6	2.5	7	29.0	4800

• Rated current at 690 V.

Order No. supplements

Motor type	Penultimate position: Voltage identifier, 50 Hz: 230 VΔ / 400 VY	400 VΔ / 690 VY	500 VY	500 VΔ	Final position: Type of construction identifier, IM B 3	Price supplement: IM B 5	IM V 1 With protective cover	IM B 14 With standard flange	IM B 14 With special flange	IM B 35
1MJ6 070 to 1MJ6 097	**1**	**6**	**3**	**–**	**0**	**1**	**4**	**2**	**3** [5]	**6**
1MJ6 106 to 1MJ6 166	**1**	**6**	**3**	**5**	**0**	**1**	**4**	**–**	**–**	**6**
1MJ6 183 to 1MJ6 207	**1**	**6**	**3**	**5**	**0**	**1**	**4**	**–**	**–**	**6**
1MJ7 220 to 1MJ7 313	**1**	**6**	**3**	**5**	**0**	**1**	**4**	**–**	**–**	**6**
1MJ8 313 to 1MJ8 316	**–**	**6**	**3**	**5**	**0**	**1**	**4**	**–**	**–**	**6**
1MJ8 353 to 1MJ8 357	**–**	**6**	**3**	**5**	**0**	**–**	**4**	**–**	**–**	**6**
1MJ1 353 to 1MJ1 457	**–**	**6**	**3**	**5**	**0**	**–**	**4**	**–**	**–**	**6**

Other voltage and/or frequency, voltage identifier **"9"**.
Order codes are required for this purpose
(see "Technical information", "Voltages, currents and frequencies").

For other types of construction, see "Technical information", "Types of construction".

1) For connection to 230 V, parallel supply cables are required (see "Technical information", "Connections, circuits and terminal blocks").

2) The motors have two terminal blocks.

3) For connection to 400 V, parallel supply cables are required (see "Technical information", "Connections, circuits and terminal blocks").

4) For connection to 500 V, parallel supply cables are required (see "Technical information", "Connections, circuits and terminal blocks").

5) Only up to 1MJ6 083.

1MJ · EEx de IIC type of protection

Selection and ordering data

Rated output	Size	Order No.	Operating data at rated output					Starting torque	Starting current	Stalling torque	Torque class	Moment of inertia	Weight
		Order No. supplement for voltage and type of construction, see table below	Rated speed	Efficiency η	Power factor p.f.	Rated current at 400 V	Rated torque	For direct-on-line starting as multiple of the rated				J	Type of constr. IM B 3 approx.
								torque	current	torque			
kW			rpm	%		A	Nm				KL	kg m^2	kg
Temperature classes T1 to T4, IP55 degree of protection, temperature class F													**ATEX**
	1000 rpm, 6-pole, 50 Hz												
0.25	71 M	**1MJ6 073–6CA . .**	870	63	0.7	0.82	2.7	2.2	3.1	2.2	16	0.0009	16
0.37	80 M	**1MJ6 080–6CA . .**	910	64	0.71	1.18	3.9	1.9	3.3	2	16	0.0015	35
0.55		**1MJ6 083–6CA . .**	900	64	0.74	1.67	5.8	2	3.5	2.1	16	0.0018	23
0.75	90 L	**1MJ6 096–6CA . .**	910	69	0.76	2.1	8.0	2.2	3.9	2.3	16	0.0028	32
1.1		**1MJ6 097–6CA . .**	905	72	0.75	2.95	12	2.4	4.3	2.4	16	0.0035	32
1.5	100 L	**1MJ6 106–6CA . .**	930	75	0.73	4.0	15	2.3	4.5	2.5	16	0.0063	39
2.2	112 M	**1MJ6 113–6CA . .**	945	76	0.76	5.5	22	2.2	4.8	2.5	16	0.011	52
3	132 S	**1MJ6 130–6CA . .**	945	78	0.75	7.4	30	2	4.8	2.2	16	0.015	78
4	132 M	**1MJ6 133–6CA . .**	945	79	0.76	9.6	40	2	5	2.4	16	0.019	85
5.5	132 M	**1MJ6 134–6CA . .**	950	83	0.76	12.6	55	2.2	5.4	2.5	16	0.025	92
7.5	160 M	**1MJ6 163–6CA . .**	960	86	0.72	17.5	75	2.1	5.1	2.5	16	0.041	134
11	160 L	**1MJ6 166–6CA . .**	960	87	0.74	24.5	109	2.3	5.5	2.5	16	0.049	167
15	180 L	**1MJ6 186–6CA . .**	970	89	0.83	29.5	148	2.6	6.3	2.4	16	0.20	190
18.5	200 L	**1MJ6 206–6CA . .**	975	90.2	0.82	36	181	2.6	6.3	2.3	16	0.29	240
22		**1MJ6 207–6CA . .**	975	90.8	0.83	42.5	215	2.5	5.7	2.3	16	0.33	255
30	225 M	**1MJ7 223–6CA . .**	978	92	0.84	56	293	2.6	5.7	2.2	16	0.57	330
37	250 M	**1MJ7 253–6CA . .**	980	92.4	0.84	69	361	2.6	6	2.1	16	0.89	440
45	280 S	**1MJ7 280–6CA . .**	982	93	0.86	81	438	2.4	6	2.3	16	1.3	560
55	280 M	**1MJ7 283–6CA . .**	984	93.6	0.86	99 [1]	534	2.5	6.2	2.4	16	1.5	600
75	315 S	**1MJ7 310–6CA . .**	988	93.8	0.85	136	725	2.4	6.2	2.5	16	2.4	810
90	315 M	**1MJ7 313–6CA . .**	988	94.2	0.85	162 [1]	870	2.4	6.2	2.5	16	2.9	870
110	315 M	**1MJ8 313–6AC . .**	990	95.3	0.86	195	1061	2.1	6.8	2.3	10	4.8	1150
132	315 M	**1MJ8 314–6AC . .**	990	95.4	0.87	228	1273	2.1	6.6	2.3	10	4.8	1150
160	315 L	**1MJ8 316–6AC . .**	990	95.5	0.87	275	1543	2.1	6.6	2.3	10	6.0	1250
200	355	**1MJ8 353–6AD . .**	990	95.6	0.86	350	1929	1.1	6.5	2.2	7	8	1900
250		**1MJ8 356–6AD . .**	990	95.8	0.85	440	2412	1.1	6.5	2.2	7	9	2200
280	355	**1MJ1 353–6AD . .**	993	96.3	0.84	500	2693	1.05	5.8	2.4	7	10.5	2500
315		**1MJ1 355–6AD . .**	993	96.4	0.84	560	3029	1.0	5.7	2.35	7	12.5	2700
355		**1MJ1 357–6AD . .**	993	96.5	0.85	630	3415	1.0	5.6	2.3	7	12.5	2700
400	400	**1MJ1 403–6AD . .**	994	96.5	0.84	715	3844	1.0	5.6	2.3	7	18	3200
450		**1MJ1 405–6AD . .**	994	96.6	0.84	800 [2]	4323	1.0	5.5	2.25	7	21.5	3500
500		**1MJ1 407–6AD . .**	994	96.7	0.84	890 [2]	4805	1.05	5.7	2.3	7	21.5	3500
560	450	**1MJ1 453–6AD . .**	995	96.9	0.85	980 [2] [3]	5374	0.95	5.8	2.3	7	34.0	4600
630		**1MJ1 455–6AD . .**	995	97.0	0.85	1105 [2] [3] [4]	6046	0.95	5.7	2.3	7	34.0	4600
710		**1MJ1 457–6AD . .**	995	97.1	0.85	1240 [2] [3] [4]	6813	0.95	5.7	2.25	7	40.0	4900
780		**1MJ1 458–6AD . .**	995	97.2	0.85	790 •	7486	1.0	6.0	2.4	7	40.0	4900

• Rated current at 690 V.

Order No. supplements

Motor type	**Penultimate position: Voltage identifier**				**Final position: Type of construction identifier**					
	50 Hz				IM B 3	Price supplement				
	230 VΔ / 400 VY	400 VΔ / 690 VY	500 VY	500 VΔ		IM B 5	IM V 1 With protective cover	IM B 14 With standard flange	IM B 14 With special flange	IM B 35
1MJ6 073 to 1MJ6 097	**1**	**6**	**3**	**–**	**0**	**1**	**4**	**2**	**3** [5]	**6**
1MJ6 106 to 1MJ6 166	**1**	**6**	**3**	**5**	**0**	**1**	**4**	**–**	**–**	**6**
1MJ6 186 to 1MJ6 207	**1**	**6**	**3**	**5**	**0**	**1**	**4**	**–**	**–**	**6**
1MJ7 223 to 1MJ7 313	**1**	**6**	**3**	**5**	**0**	**1**	**4**	**–**	**–**	**6**
1MJ8 313 to 1MJ8 316	**–**	**6**	**3**	**5**	**0**	**1**	**4**	**–**	**–**	**6**
1MJ8 353 to 1MJ8 356	**–**	**6**	**3**	**5**	**0**	**–**	**4**	**–**	**–**	**6**
1MJ1 353 to 1MJ1 458	**–**	**6**	**3**	**5**	**0**	**–**	**4**	**–**	**–**	**6**

Other voltage and/or frequency, voltage identifier **"9"**.
Order codes are required for this purpose
(see "Technical information", "Voltages, currents and frequencies").

For other types of construction, see "Technical information", "Types of construction".

1) For connection to 230 V, parallel supply cables are required (see "Technical information", "Connections, circuits and terminal blocks").

2) For connection to 400 V, parallel supply cables are required (see "Technical information", "Connections, circuits and terminal blocks").

3) The motors have two terminal blocks.

4) For connection to 500 V, parallel supply cables are required (see "Technical information", "Connections, circuits and terminal blocks").

5) Only up to 1MJ6 083.

Rated output	Size	Order No.	Operating data at rated output					Starting torque	Starting current	Stalling torque	Torque class	Moment of inertia	Weight
		Order No. supplement for voltage and type of construction, see table below	Rated speed	Efficiency η	Power factor p.f.	Rated current at 400 V	Rated torque	For direct-on-line starting as multiple of the rated				J	Type of constr. IM B 3 approx.
								torque	current	torque			
kW			rpm	%		A	Nm				KL	kg m²	kg
Temperature classes T1 to T4, IP55 degree of protection, temperature class F													**ATEX**
	750 rpm, 8-pole, 50 Hz												
0.37	90 L	**1MJ6 096–8CB . .**	655	61	0.76	1.16	5.3	1.4	2.8	1.7	13	0.0025	28
0.55		**1MJ6 097–8CB . .**	655	65	0.76	1.62	7.9	1.5	2.9	1.7	13	0.0035	30
0.75	100 L	**1MJ6 106–8CB . .**	665	65	0.77	2.15	11	1.6	3.5	1.8	13	0.0053	40
1.1		**1MJ6 107–8CB . .**	685	74	0.74	2.9	16	1.8	3.9	2	13	0.0070	48
1.5	112 M	**1MJ6 113–8CB . .**	700	74	0.73	4.0	21	1.8	4.4	2	13	0.013	52
2.2	132 S	**1MJ6 130–8CB . .**	695	74	0.72	6.0	30	1.7	4.2	2.1	13	0.014	78
3	132 M	**1MJ6 133–8CB . .**	700	76	0.72	7.9	40	1.9	4.4	2.2	13	0.019	85
4	160 M	**1MJ6 163–8CB . .**	715	81	0.72	9.9	54	2.1	4.8	2.3	13	0.035	119
5.5	160 M	**1MJ6 164–8CB . .**	710	83	0.72	13.3	74	2.3	5.1	2.5	13	0.043	134
7.5	160 L	**1MJ6 166–8CB . .**	715	84	0.72	17.9	100	2.6	5.8	2.8	13	0.062	159
11	180 L	**1MJ6 186–8CB . .**	725	87	0.7	26	145	2	5	2.2	13	0.21	191
15	200 L	**1MJ6 207–8CB . .**	725	87.5	0.78	32	198	2.1	5	2.2	13	0.37	263
18.5	225 S	**1MJ7 220–8CB . .**	725	88.6	0.8	37.5	244	2.1	5	2.2	13	0.58	325
22	225 M	**1MJ7 223–8CB . .**	725	90.1	0.81	43.5	290	2.1	5	2.2	13	0.66	350
30	250 M	**1MJ7 253–8CB . .**	730	91.6	0.81	58	392	2.1	5	2.1	13	1.1	465
37	280 S	**1MJ7 280–8CB . .**	732	92.7	0.82	70	483	2.2	5.5	2.2	13	1.4	570
45	280 M	**1MJ7 283–8CB . .**	734	92.8	0.83	84	585	2.2	5.5	2.2	13	1.6	620
55	315 S	**1MJ7 310–8CB . .**	738	93.1	0.82	104	712	2.2	6	2.4	13	2.3	780
75	315 M	**1MJ7 313–8CB . .**	738	93.6	0.82	140	970	2.3	6.2	2.5	13	3.0	890
90	315 M	**1MJ8 313–8AB . .**	740	94.4	0.79	175	1161	1.7	6.1	2	10	4.8	1150
110	315 M	**1MJ8 314–8AB . .**	740	94.4	0.79	210	1420	1.7	6.1	2	10	4.8	1150
132	315 L	**1MJ8 316–8AB . .**	740	94.4	0.8	255	1704	1.8	6.1	2	10	6.0	1250
160	355	**1MJ8 353–8AD . .**	740	95.1	0.83	292	2065	1.3	5.3	2.2	7	12	1900
200		**1MJ8 356–8AD . .**	740	95.4	0.83	365	2581	1.3	5.3	2.2	7	14.7	2250
250	355	**1MJ1 355–8AD . .**	743	95.9	0.83	455	3213	1.1	5.4	2.25	7	12.5	2700
280		**1MJ1 357–8AD . .**	743	96.0	0.82	515	3597	1.15	5.4	2.3	7	12.5	2700
315	400	**1MJ1 403–8AD . .**	744	96.1	0.82	580	4043	1.0	5.4	2.35	7	17.5	3200
355		**1MJ1 405–8AD . .**	744	96.2	0.82	645	4557	1.0	5.3	2.3	7	21.0	3500
400		**1MJ1 407–8AD . .**	744	96.3	0.82	735	5136	0.95	5.2	2.25	7	21.0	3500
450	450	**1MJ1 453–8AE . .**	745	96.6	0.84	800 [1]	5769	0.85	5.3	2.25	5	35.5	4600
500		**1MJ1 455–8AE . .**	745	96.7	0.83	900 [1]	6411	0.85	5.2	2.2	5	35.5	4600
560		**1MJ1 457–8AE . .**	745	96.7	0.84	1000 [1] [2] [3]	7178	0.85	5.4	2.25	5	42.0	4900
630		**1MJ1 458–8AE . .**	745	96.8	0.83	1130 [1] [2] [3]	8075	0.9	5.3	2.25	5	42.0	4900

Order No. supplements

Motor type	**Penultimate position: Voltage identifier**				**Final position: Type of construction identifier**					
	50 Hz				IM B 3	Price supplement				
	230 VΔ / 400 VY	400 VΔ / 690 VY	500 VY	500 VΔ		IM B 5	IM V 1 With protective cover	IM B 14 With standard flange	IM B 14 With special flange	IM B 35
1MJ6 096 and 1MJ6 097	**1**	**6**	**3**	**–**	**0**	**1**	**4**	**2**	**3** [4]	**6**
1MJ6 106 to 1MJ6 166	**1**	**6**	**3**	**5**	**0**	**1**	**4**	**–**	**–**	**6**
1MJ6 186 to 1MJ6 207	**1**	**6**	**3**	**5**	**0**	**1**	**4**	**–**	**–**	**6**
1MJ7 220 to 1MJ7 313	**1**	**6**	**3**	**5**	**0**	**1**	**4**	**–**	**–**	**6**
1MJ8 313 to 1MJ8 316	**–**	**6**	**3**	**5**	**0**	**1**	**4**	**–**	**–**	**6**
1MJ8 353 to 1MJ8 356	**–**	**6**	**3**	**5**	**0**	**–**	**4**	**–**	**–**	**6**
1MJ1 355 to 1MJ1 458	**–**	**6**	**3**	**5**	**0**	**–**	**4**	**–**	**–**	**6**

Other voltage and/or frequency, voltage identifier **"9"**.
Order codes are required for this purpose
(see "Technical information", "Voltages, currents and frequencies").

For other types of construction, see "Technical information", "Types of construction".

1) For connection to 400 V, parallel supply cables are required (see "Technical information", "Connections, circuits and terminal blocks").

2) The motors have two terminal blocks.

3) For connection to 500 V, parallel supply cables are required (see "Technical information", "Connections, circuits and terminal blocks").

4) Only up to 1MJ6 083.

Order codes for special designs

Additional order suffix **–Z** with order code	Special designs	Motor type – Size			
		1MJ6	1MJ7	1MJ8	1MJ1
Motor protection					
A11	Motor protection with PTC thermistor and 3 embedded temperature sensors for shutdown [1])	71 – 200 ●	225 – 315	315 – 355	355 – 450
A12	Motor protection with PTC thermistor and 6 embedded temperature sensors for alarm and shutdown [1])	71 – 200 ▲	225 – 315 ▲	315 – 355 ▲	355 – 450 ▲
A15	Motor protection with PTC thermistor for converter-fed operation with 3 embedded temperature sensors for shutdown [1])	71 – 200 ●	225 – 315	315 – 355	355 – 450
A16	Motor protection with PTC thermistor for converter-fed operation with 6 embedded temperature sensors for alarm and shutdown [1])	71 – 200 ▲	225 – 315 ▲	315 – 355 ▲	355 – 450 ▲

● Anti-condensation heating (order codes K45, K46) up to size 160 L not possible additionally.

▲ Anti-condensation heating (order codes K45, K46) not possible additionally. Exception: 1MJ7 31 .

Paint finish					
K26	Special paintwork in RAL 7030 stone grey	Standard design (without order code)	225 – 315	315 – 355	355 – 450
M16	Special paintwork in RAL 1002 sand yellow	71 – 200	225 – 315 With order code **Y54** and special paint-work RAL	315 – 355 With order code **Y54** and special paint-work RAL	355 – 450 With order code **Y54** and special paint-work RAL . . . .
M17	Special paintwork in RAL 1013 pearl white				
M18	Special paintwork in RAL 3000 flame red				
K27	Special paintwork in RAL 6011 mignonette green				
M19	Special paintwork in RAL 6021 pale green				
M20	Special paintwork in RAL 7001 silver grey				
K28	Special paintwork in RAL 7031 bluish grey				
L42	Special paintwork in RAL 7032 pebble grey				
M21	Special paintwork in RAL 7035 light grey				
M22	Special paintwork in RAL 9001 cream				
M23	Special paintwork in RAL 9002 grey white				
L43	Special paintwork in RAL 9005 jet black				
Y54 ● And special paintwork RAL....	Special paintwork in other colors: RAL 1015, 1019, 2003, 2004, 3007, 5007, 5009, 5010, 5012, 5015, 5017, 5018, 5019, 6019, 7000, 7004, 7011, 7016, 7022, 7033	71 – 200	225 – 315	315 – 355	355 – 450
Y53 ● And standard paintwork RAL....	Standard paintwork in other colors	–	225 – 315	315 – 355	355 – 450
K23	Unpainted (only cast iron parts primed)	71 – 200	225 – 315	315 – 355	355 – 450
K24	Unpainted, only primed	71 – 200	–	–	–

RAL No.	Name of color	RAL No.	Name of color
1015	Light ivory	5017	Traffic blue
1019	Grey beige	5018	Turquoise blue
2003	Pastel orange	5019	Capri blue
2004	Pure orange	6019	Pastel green
3007	Wine red	7000	Squirrel grey
5007	Black blue	7004	Signal grey
5009	Azure blue	7011	Iron grey
5010	Gentian blue	7016	Anthracite grey
5012	Light blue	7022	Umbra grey
5015	Sky blue	7033	Cement grey

● Additional plain text required.

1) For appropriate certified 3RN1 tripping unit, see Catalog LV 10.

Order codes for special designs

Additional order suffix **–Z** with order code	Special designs	Motor type – Size			
		1MJ6	1MJ7	1MJ8	1MJ1
Mechanical design					
K09	Terminal box on RHS (view onto drive end)	90 – 200	225 – 315	315 – 355	355 – 450
K10	Terminal box on LHS (view onto drive end)	90 – 200	225 – 315	315 – 355	355 – 450
K83	Rotation of terminal box by 90°, inserted from drive end	71 – 200	225 – 315	315 – 355	355 – 450
K84	Rotation of terminal box by 90°, inserted from non-drive end	71 – 200	225 – 315	315 – 355	355 – 450
K85	Rotation of terminal box by 180°	71 – 200	225 – 315	315 – 355	355 – 450
K01	Vibrational severity grade R	71 – 200	225 – 315	315 – 355	355 – 450
K16	Second standard shaft end [1])	71 – 200	225 – 315	315 – 355	355 – 450
K17	Radial sealing ring on drive end with flange types [2])	71 – 200	225 – 315	315 – 355	355 – 450
K20	Bearings for increased cantilever forces	180 – 200 Vibrational severity grade R on request.	225 – 250	–	–
K40	Regreasing device	180 – 200	225 – 250, Standard design from 280 and higher	Standard design	Standard design
L27	Insulated bearing cartridge	–	250 – 315	315 – 355	355 – 450
D01	CCC China Compulsory Certification	71 – 90 [3])	–	–	–
K30	VIK design [4])	71 – 200	225 – 315	315 – 355	355
K31	Extra rating plate, loose	71 – 200	225 – 315	315 – 355	355 – 450
Y82 ●	Extra rating plate	71 – 200	225 – 315	315 – 355	355 – 450
And order codes					
K37	Low noise version for 2-pole motors with clockwise rotation [5])	132 – 200	225 – 315	315 – 355	355 – 450
K38	Low noise version for 2-pole motors with anti-clockwise rotation [5])	132 – 200	225 – 315	315 – 355	355 – 450
K45	Anti-condensation heating for 230 V	71 – 200 ● ▲	225 – 315 ▲	315 – 355 ▲	355 – 450 ▲
K46	Anti-condensation heating for 115 V	71 – 200 ● ▲	225 – 315 ▲	315 – 355 ▲	355 – 450 ▲
L99	Wire-lattice pallet	71 – 160	–	–	–

● PTC thermistor (order codes A11, A15) up to size 160 L not available additionally.

▲ 6 PTC thermistors (order codes A12, A16) not available additionally. Exception: 1MJ7 31 .

Certification					
B02	Factory test certificate 2.3 acc. to EN 10 204	71 – 200	225 – 315	–	–
Marine version – "Operation below deck" [6]) [7])					
E00	Without certificate acc. to ABS 50 °C/CCS 45 °C/ RINA 45 °C Temperature class F used acc. to F	71 – 200	225 – 315	–	–
E11	Certified according to GL (Germanischer Lloyd) Germany, CT 45 °C, Temperature class F used acc. to F	71 – 200	225 – 315 [8])	–	–
E21	Certified according to LRS (Lloyds Register of Shipping) Great Britain, CT 45 °C, Temperature class F used acc. to F	71 – 200	225 – 315 [8])	–	–
E31	Certified according to BV (Bureau Veritas) France, CT 45 °C, Temperature class F used acc. to F	71 – 200	225 – 315 [8])	–	–
E51	Certified according to DNV (Det Norske Veritas) Norway, CT 45 °C, Temperature class F used acc. to F	71 – 200	225 – 315 [8])	–	–

● Additional plain text required.

1) For 1MJ6/1MJ7 and vertical designs from frame size 180 M upwards available on request, low-noise version (2-pole) not possible.
Design with cover not available.

2) Not possible for size IM V 3, only for 4-pole to 8-pole motors for size 180 M upwards.

3) The following motors require a CCC certificate:
– 2-pole motors: ≤ 2.2 kW
– 4-pole motors: ≤ 1.1 kW
– 6-pole motors: ≤ 0.75 kW
– 8-pole motors: ≤ 0.55 kW

4) For 2-pole motors from size 315 S upwards, additional low-noise version is required. Order code K37 or K38.

5) The motors are up to 80 mm longer than normal. Second shaft end not possible.

6) Works test certificate 2.3 to EN 10 204 is also supplied (does not apply to Order Code **E00**). Individual acceptance test must be specified in plain text on ordering if required (price supplement).

7) For 1MJ motors of class F used acc. to class B, derating may be necessary.

8) The 1MJ7 motors do not have a type approval certificate (certificate only for individual acceptance test).

Notes

Squirrel-cage motors
Sector solutions
Selection and ordering data

Marine motors

6/2 *Overview*
6/2 Standards and specifications
6/3 Mechanical design
6/3 Certificates

Smoke extraction motors

6/4 *Overview*
6/4 Low-voltage motors for use in smoke and heat extraction machinery
6/4 Technical design

Selection and ordering data

Temperature/time classes F200 and F300

6/7 • Forced-air cooled squirrel-cage motors 1PP7, 1PP5, 1PP6, 2-pole, 4-pole, sizes 80 to 315
6/8 • Forced-air cooled squirrel-cage motors 1PP7, 1PP5, 1PP6, 6-pole, sizes 80 to 315
6/9 • Self-cooled squirrel-cage motors 1LA7, 1LA5, 1LG6, 2-pole, 4-pole, sizes 80 to 315
6/10 • Self-cooled squirrel-cage motors 1LA7, 1LA5, 1LG6, 6-pole, sizes 80 to 315

Temperature/time class F400

6/11 • Forced-air cooled squirrel-cage motors 1PP6, 2-pole, 4-pole, sizes 100 to 315
6/12 • Forced-air cooled squirrel-cage motors 1PP6, 6-pole sizes 100 to 315
6/13 • Self-cooled squirrel-cage motors 1LA6, 1LG6, 2-pole, 4-pole, sizes 100 to 315
6/14 • Self-cooled squirrel-cage motors 1LA6, 1LG6, 6-pole, sizes 100 to 315

Order codes for special designs

6/15 • Windings and motor protection
6/15 • Paint finish
6/15 • Mechanical design
6/15 • Notes on safety and commissioning/certification
6/15 • Additional suffixes

6

Overview

Low-voltage motors in the marine version can be used as auxiliary drives below deck on ships and in the offshore industry. The thermal utilization of the motors is matched to the generally higher ambient temperatures on board ship. If the application demands compliance with additional regulations, e.g. protection against explosion hazards, the appropriate motor series must be chosen from the previous section of this catalogue.

The classification authorities categorize the auxiliary drives on board ships into "essential services" and "non-essential services". Acceptance testing by a representative of the relevant classification authority is required for motors used in essential auxiliary drives, depending on their output.

In special cases, in addition to the acceptance test, supervision of construction may also be required. Supervision of construction involves monitoring of the separate manufacturing stages of a motor by an inspector from the classification authority.

The charges of the classification authority incurred for acceptance testing or acceptance testing with supervision of construction will be invoiced separately.

Approved motor series type with aluminium (Alu) and cast iron (C iron) housings to the IP55 and IP56 (non-heavy sea) degrees of protection in accordance with Sections 3, 4 and 5. [2])

Motors	Sizes																		Output range [1])
	56	63	71	80	90	100	112	132	160	180	200	225	250	280	315	355	400	450	kW
1LA7/1PP7	Alu	Alu	Alu	Alu	Alu	Alu	Alu	Alu	Alu										**0.06 – 18.5**
1LA5/1PP5										Alu	Alu	Alu							**11 – 45**
1LA9/1PP9	Alu	Alu	Alu	Alu	Alu	Alu	Alu	Alu	Alu	Alu	Alu								**0.06 – 53**
1LA6						C iron	C iron	C iron	C iron										**0.75 – 18.5**
1LG4/1PP4										C iron	C iron	C iron	C iron	C iron	C iron				**11 – 200**
1LG6/1PP6										C iron	C iron	C iron	C iron	C iron	C iron				**11 – 200**
1LA8, 1PQ8 [3])															C iron	C iron	C iron	C iron	**160 – 1000**
1MA7		Alu	Alu	Alu	Alu	Alu	Alu	Alu	Alu										**0.12 – 16**
1MA6						C iron	C iron	C iron	C iron	C iron	C iron	C iron	C iron	C iron	C iron				**1.3 – 165**
1MJ6			C iron	C iron	C iron	C iron	C iron	C iron	C iron	C iron	C iron								**0.25 – 37**
1MJ7 [3])												C iron	C iron	C iron	C iron				**18.5 – 132**

Standards and specifications

Due to the particular climatic conditions, marine motors also comply with the IEC 92-301 standard (electrical installation on board ship) in addition to the regulations for standard motors. In addition, the motors are manufactured and type approved in accordance with the regulations of the following marine classification authority:

BV Bureau Veritas (France)

GL Germanischer Lloyd (Germany)

LRS Lloyds Register of Shipping (Great Britain)

DNV Det Norske Veritas (Norway)

Furthermore, the motors can be produced in accordance with the regulations of the following classification authority (however without a type approval certificate):

ABS American Bureau of Shipping (USA)

RINA Registro Italiano Navale (Italy)

CCS Chinese Classification Society (China)

Regulations of the individual classification authorities:

IEC/EN /classification agencies	Coolant temperature CT	Limit temperature for temperature class F	Acceptance testing for drives for essential services above [4])	Supervision of construction for drives for essential services	Order code for motors in temperature class F used acc. to F [3])[5])[6]) **with/without** type test	Order code for 1LA8/1PQ8 motors in temperature class F used acc. to F [5])[6]) **without** type test
	°C	K	kW	kW		
IEC/EN 60034-1	40	105	–	–	–	–
GL	45	100	≥ 50	–	E11/–	E11
LRS	45	95	≥ 100	≥ 100	E21/–	E21
BV	45	100	≥ 50	–	E31/–	E31
DNV	45	95	≥ 300	–	E51/–	E51
ABS	50	95	≥ 100	≥ 100	–/E00	E61
RINA	45	95	≥ 50	–	–/E00	–
CCS	45	100	≥ 100	–	–/E00	E71

1) Output data with reference to 50 Hz mains-fed operation at CT 45 °C in temperature class F, used acc. to F.

2) Derating may be necessary in the case of 1MA and 1MJ motors, (E) Ex n (Zone 2) motors and 1LA9 motors with increased power.

3) The 1LA8/1PQ8 and 1MJ7 motors are not type approved (certificate only for individual acceptance test).

4) Individual acceptance tests are not required below the specified outputs.

5) Utilization of temperature class F according to B can cause derating.

6) Acceptance testing may be required for drives for essential services.

Mechanical versions

In general, all marine motors have an external earthing terminal. The rating plate features the relevant marine classification authority complete with the associated coolant temperature. In addition, a factory test certificate 2.3 to EN 10 204 is supplied that includes the certificate number of the marine classification authority.

Standard version to IP55 degree of protection, optionally IP56 (non-heavy sea) can be ordered with order code **K52**.

Motors can be supplied, depending on the motor series, in corrosion-resistant aluminium housing and in rugged cast iron version. The motors with an aluminium housing in the flange version have a rugged cast iron flange.

Increased coolant temperature

The motors in temperature class F have a thermal reserve. Derating may be necessary with coolant temperatures higher than CT 45° C (price supplement). When ordering, specify Order No. with **-Z** and plain text. For 1LA8 motors use Order Code **E80** and plain text when ordering. The permissible output power can be determined using the following table.

	Coolant temperature CT °C			
	45	50	55	60
Reduction factor	1.00	0.96	0.92	0.87

Higher efficiency

The efficiency of marine motors is similar to that of energy-saving motors. This ensures energy-saving operation on board ship.

Windings and motor protection

For winding and bearing monitoring, the motors can be equipped with PTC thermistors, temperature sensors and resistance thermometers. Motors can be equipped with anti-condensation heating if windings are to be exposed to condensation.

Paint finish

The special paint finish range for the "worldwide" climate group according to DIN IEC 60 721-2-1 offers high corrosion protection and is recommended for installation of motors in a corrosive sea atmosphere or in rooms that are constantly damp. Special paint finish is standard for all 1LA5, 1LA6, 1LA7, 1LA9, 1MA7 motors as well as 1MA6/1MJ6 up to size 200L.

Special paint finish can be ordered for 1LG4/6 and 1MA6 in sizes 225S – 315M depending on the RAL color shade as an option. Special paint with increased layer thickness available on request.

Ordering example

Squirrel-cage motor IP55, 1500 rpm, 55 kW, efficiency class EFF1, 400VΔ /690 VY, 50 Hz, IM B3 type, marine version essential drive with acceptance test and certificate from Germanischer Lloyd, coolant temperature 45 °C, special paint finish RAL 5007

In order, specify:
1LG6 253-4AA60-Z
E11+Y54

Plain text (E-line):
GL-individual acceptance test, special paint finish RAL 5007

Certificates

Overview

Low-voltage motors for use in smoke and heat extraction machinery according to EN 12 101-3

The new low-voltage motors with squirrel-cage rotors for use in smoke and heat extraction machinery in accordance with EN 12 101-3 are mainly designed for driving smoke extraction fans, so they are also known as smoke extraction motors. They are mainly used in buildings that demand smoke monitoring due to their shape and design. Some typical application examples are tunnels, single and multi-storey shopping centres, industrial buildings and warehouses, building complexes and atriums, theatres, enclosed car parks and stairways.

The dual function motors function in

- operation under normal conditions as a fan motor
- fault operation (at high ambient temperatures, specified minimum operating times) to keep access and escape routes smoke-free, to aid fire fighting by creating a smoke-free layer, to delay and/or prevent spread of a fire, to protect devices and equipment, to reduce the heat stress of components during a fire, and to reduce secondary fire damage due to thermal decomposition products and hot gases.

Temperature/time classification according to EN 12 101-3

- **F200** or 200 °C for 120 min
- **F300** or 300 °C for 60 min
- **F400** or 400 °C for 120 min

Testing and test certification

The smoke extraction motor series listed in the selection tables have been tested by the "Research and test laboratory of the Department of Climate Control and Building Services of the Technical University of Munich" in accordance with EN 12 101-3.

F200/F300 was generally tested at 300 °C for 120 min.

The verification documents for the tests are available.

Supervised construction approvals for smoke extraction units – Certification procedure

- **Use of smoke extraction motors in smoke extraction fans with existing supervised construction approval in accordance with EN 12 101-3.**

  1. Application by the fan manufacturer to the DIBT (Deutsches Institut für Bautechnik - German Institute for Building Installation Systems) in Berlin for installing the motors tested to EN 12 101-3 in an already existing approval for the smoke extraction fans.
  2. DIBT requests an expert opinion concerning the suitability of the tested motors from the fan testing authority.
  3. DIBT includes the motors in the supervised construction approvals after receiving a satisfactory expert opinion.

- **Initial approval of smoke extraction units**

  In this case, complete assemblies (motor + fan) must be tested at an approved test centre (e.g. TU Munich) before submission of an application for the supervised construction approval to the DIBT.

Technical design

Motor series
The smoke extraction motors based on basic series 1LA and 1LG

- Basic series 1PP.; forced-air cooled, version without internal fan, located in air flow of the driven fan
- Sub-series 1LA. or 1LG.; self-cooled, version with internal fan (metal)

The motors are manufactured with cast iron or aluminium housings in accordance with their fire protection classes.

Standards and specifications
Also applicable:

Permanently installed fire fighting equipment EN 12 101-3: Equipment for controlling smoke and heat flow, Part 3, Specification for smoke and heat extraction units.

Voltage and frequency
Rated voltages according to IEC 60034-1

230 V△ 50 Hz

400 V△ 50 Hz and
400 VY 50 Hz

500 V△ 50 Hz and
500 VY 50 Hz

690 VY 50 Hz

Abnormal voltages and 60 Hz, on request.

Labeling

- Rating plate
  For the listed rated voltages with 50 Hz performance data.
- Fault plate
  showing:
  Number and year of issue of the European standard, temperature/time class, minimum operating time.

All labels, corrosion resistant, second set of labels loose.

Rated output, operating mode, number of poles
The rated output applies for continuous operation (normal operation) to IEC 60034-1, at a frequency of 50 Hz, coolant temperature up to 40 °C, installation height up to 1000 m above sea level. For a higher coolant temperature and installation altitude, derating is required (for reduction factors, see "Technical information").

Fault operation:

In contrast to normal operation, there is fault operation to EN 12 101-3.

At the end of the fault time, the motor may be inoperable. Deinstallation of the motor followed by an overhaul or replacement with a new motor is therefore mandatory.

Any "thermal motor protection" implemented must be deactivated in the event of a fault.

No. of poles: 2, 4 and 6; more poles and pole-change, on request.

Insulation arrangement
Special insulation arrangements, matched to the respective temperature/time classes. Maximum thermal utilization according to temperature class F.

Insulation of the smoke extraction motors is designed to permit operation with a converter at voltages ≤ 500 V without restrictions. This also applies for operation with a PWM converter with voltage peak times $t_s > 0.1\ \mu s$ at the motor terminals.

Converter-fed operation is not permitted in the event of emergency situation.

Technical design (continued)

Water drain holes
Always provided; sealed in accordance with IP55 degree of protection.

Bearing plates
All bearing plates are cast iron.

Connection method
Protruding non-metallic sheathed cable, without terminal block, with cover plate or funnel cap. Cable length is dependent on the axle height.

Sizes 80 to 112: 1.0 m

Sizes 132 to 200: 1.5 m

Sizes 225 to 315: 2.5 m

Special designs of connecting cables, on request.

Position of the connecting cable

- Sizes 80 to 160:
  - On the top at NDE as standard. Optionally left or right on the NDE (for foot-mounted type with screw mounted feet).
- Sizes 180 to 315:
  - Flange foot-mounted types: On the top at NDE as standard. Optionally left or right at NDE.
  - All foot-mounted types: On the top at DE as standard with connecting cable looped through in the direction of NDE. Optionally left or right on the DE with connecting cables looped through in the direction of NDE (for foot-mounted types with screw-mounted feet).

Earthing by means of protruding cable

Bearing, grease
Special bearing arrangements matched to the respective temperature class.

In accordance with fire protection classes F200/F300, F400, and the individual sizes, grooved ball bearing series of 62 or 63 clearance.

Fixed bearing at DE.

Nominal bearing service life L_{10h} (fan drive) at least 20000 hours at maximum permitted rated load.

Motors in sizes 80 to 250 are usually permanently greased.

Paint finish
The motors are given a two-part paint finish as standard (worldwide) in the color shade RAL 7030.

Minimum necessary cooling air quantities during normal operation

1LA7/1PP7 motors, sizes 80 to 160; 1LA5/1PP5, sizes 180 to 225; 1LA6/1PP6, sizes 100 to 160

Size	Air flow required in m^3/min for number of poles		
	2	4	6
80	1.74	0.90	0.60
90	3.12	1.56	1.08
100	3.96	1.86	1.26
112	4.98	3.0	1.98
132	8.04	5.04	3.36
160	12.90	9.54	6.36
180	10.98	10.98	7.267
200	15.12	13.02	8.58
225	12.12	13.02	8.58

1LG6/1PP6 motors, sizes 180 to 315:

Size	Air flow required in m^3/min for number of poles		
	2	4	6
180	12.0	13.0	8.5
200	20.5	17.0	11.0
225	20.5	18.5	12.5
250	25.5	22.5	17.0
280	24.5	28.0	21.5
315	47.0	36.0	26.5

In the motor version without an integral fan (1PP5, 6, 7), the motor lies in the air flow of the driven fan which must drive the minimum cooling air quantity over the motor housing.

With larger quantities of cooling air, the operating temperature of the motor can be reduced.

Overview

Technical design (continued)

Permissible load on the shaft end
Permitted loads in axial and radial direction. The data apply to any number of poles.

Higher loading with appropriate bearings have not been tested.

Size	No. of poles	DE bearing	Type of loading on the shaft		Shaft horizontally		Shaft vertically downwards	
					F_R	$F_{A\ pull}$	F_R	$F_{A\ pull}$
			No.		N	N	N	N
80	2 – 8	6004	1	Radial force	400	0	360	0
			2	Radial force + axial pull	150	130	40	170
			3	Axial pull	0	215	0	200
90	2 – 8	6205	1	Radial force	650	0	590	0
			2	Radial force + axial pull	250	205	100	260
			3	Axial pull	0	343	0	310
100	2 – 8	6206	1	Radial force	890	0	820	0
			2	Radial force + axial pull	400	265	300	265
			3	Axial pull	0	490	0	430
112	2 – 8	6206	1	Radial force	870	0	760	0
			2	Radial force + axial pull	400	250	250	260
			3	Axial pull	0	480	0	405
132	2 – 8	6208	1	Radial force	1070	0	810	0
			2	Radial force + axial pull	450	315	250	300
			3	Axial pull	0	580	0	450
160	2 – 8	6209	1	Radial force	1440	0	1210	0
			2	Radial force + axial pull	700	450	500	335
			3	Axial pull	0	825	0	620
180	2 – 8	6210	1	Radial force	1540	0	1020	0
			2	Radial force + axial pull	770	430	550	220
			3	Axial pull	0	815	0	455
200	2 – 8	6212	1	Radial force	2050	0	1450	0
			2	Radial force + axial pull	1200	770	500	460
			3	Axial pull	0	1350	0	720
225	2 – 8	6213	1	Radial force	2460	0	1910	0
			2	Radial force + axial pull	1370	900	500	660
			3	Axial pull	0	1560	0	920
250	2 – 8	6215	1	Radial force	2770	0	1490	0
			2	Radial force + axial pull	1400	840	500	460
			3	Axial pull	0	1500	0	710
280	2 4 – 8	6217 6317	1	Radial force	3180	0	3000	0
			2	Radial force + axial pull	1700	1820	600	1085
			3	Axial pull	0	2630	0	1380
315	2 4 – 8	6219 6319	1	Radial force	3470	0		
			2	Radial force + axial pull	1750	2200	On request	On request
			3	Axial pull	0	3000		

Load types

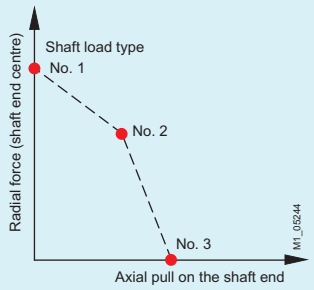

Forces on shaft extension

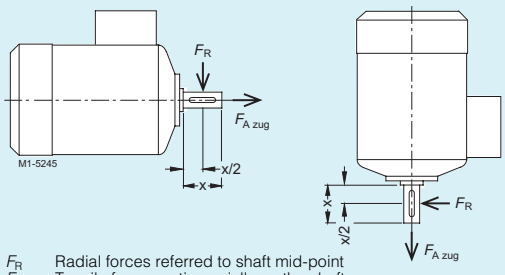

F_R Radial forces referred to shaft mid-point
$F_{A\ zug}$ Tensile forces acting axially on the shaft

Rated output	Size	Order No. Order No. supplements for voltage and type of construction, see table below	Operating data at rated output: Rated speed	Efficiency η	Power factor p.f.	Rated current at 400 V	Rated torque	Starting torque (For direct-on-line starting as multiple of the rated torque)	Starting current (For direct-on-line starting as multiple of the rated current)	Stalling torque (For direct-on-line starting as multiple of the rated torque)	Torque class	Moment of inertia J	Weight Type of constr. IM B 3 approx.
kW			rpm	%		A	Nm				KL	kg m²	kg
Forced-air cooled motors 1PP7, 1PP5 (aluminium housing) and 1PP6 (cast iron housing) IP55 degree of protection, type of cooling IC 411, temperature/time classes F200 and F300													**EN 12 101-3**
	3000 rpm, 2-pole, 50 Hz												
0.75	80 M	**1PP7 080–2TA . .**	2830	65.0	0.82	2.1	2.5	2.3	5.6	2.4	16	0.00085	9.8
1.1		**1PP7 083–2TA . .**	2845	75.0	0.80	2.7	3.7	2.6	6.1	2.7	16	0.0011	11.5
1.5	90 S	**1PP7 090–2TA . .**	2860	76.0	0.80	3.7	5.0	2.4	5.5	2.7	16	0.0015	14.6
2.2	90 L	**1PP7 096–2TA . .**	2880	80.0	0.80	5.1	7.3	2.8	6.3	3.1	16	0.002	17.4
3	100 L	**1PP7 106–2TA . .**	2890	78.0	0.83	6.8	9.9	2.8	6.8	3.0	16	0.0038	23
4	112 M	**1PP7 113–2TA . .**	2905	83.0	0.83	8.5	13	2.6	7.2	2.9	16	0.0055	31
5.5	132 S	**1PP7 130–2TA . .**	2925	85.0	0.87	10.7	18	2.0	5.9	2.8	16	0.016	44
7.5		**1PP7 131–2TA . .**	2930	88.0	0.89	13.8	24	2.3	6.9	3.0	16	0.021	52
11	160 M	**1PP7 163–2TA . .**	2940	89.5	0.86	21	36	2.1	6.5	2.9	16	0.034	71
15		**1PP7 164–2TA . .**	2940	90.0	0.90	26.5	49	2.2	6.6	3.0	16	0.04	82
18.5	160 L	**1PP7 166–2TA . .**	2940	91.0	0.91	32.5	60	2.4	7.0	3.1	16	0.052	95
22	180 M	**1PP5 183–2TA . .**	2940	91.7	0.88	39	71	2.5	6.9	3.2	16	0.077	119
30	200 L	**1PP5 206–2TA . .**	2945	92.3	0.89	53	97	2.4	7.2	2.8	16	0.14	168
37		**1PP5 207–2TA . .**	2945	92.8	0.89	65	120	2.4	7.7	2.8	16	0.16	191
45	225 M	**1PP5 223–2TA . .**	2960	93.6	0.89	78	145	2.8	7.7	3.4	16	0.2	226
55	250 M	**1PP6 253–2TB . .**	2975	95.1	0.90	94	177	2.5	7.4	3.3	13	0.466	405
75	280 S	**1PP6 280–2TB . .**	2975	95.3	0.91	126	241	2.6	7.5	2.9	13	0.832	510
90	280 M	**1PP6 283–2TB . .**	2975	95.6	0.90	152	289	3.0	7.5	3.0	13	1.00	595
110	315 S	**1PP6 310–2TB . .**	2985	95.9	0.90	186	352	2.6	7.5	3.2	13	1.39	770
132	315 M	**1PP6 313–2TB . .**	2984	96.1	0.91	220	422	2.7	7.4	3.0	13	1.62	895
160	315 L	**1PP6 316–2TB . .**	2984	96.3	0.93	260	512	2.8	7.5	3.1	13	2.09	1035
200	315 L	**1PP6 317–2TB . .**	2984	96.4	0.93	325	640	2.5	7.0	2.8	13	2.46	1225
	1500 rpm, 4-pole, 50 Hz												
0.55	80 M	**1PP7 080–4TA . .**	1395	61.0	0.75	1.96	3.7	2.2	3.9	2.2	16	0.0015	9.6
0.75		**1PP7 083–4TA . .**	1395	72.0	0.81	1.86	5.1	2.3	4.2	2.3	16	0.0018	11
1.1	90 S	**1PP7 090–4TA . .**	1415	70.5	0.74	3.15	7.4	2.3	4.6	2.4	16	0.0028	14
1.5	90 L	**1PP7 096–4TA . .**	1420	74.1	0.74	4.0	10	2.4	5.3	2.6	16	0.0035	17.3
2.2	100 L	**1PP7 106–4TA . .**	1420	78.5	0.78	5.4	15	2.5	5.6	2.8	16	0.0048	23
3		**1PP7 107–4TA . .**	1415	79.5	0.78	7.2	20	2.7	5.6	3.0	16	0.0058	26
4	112 M	**1PP7 113–4TA . .**	1440	80.0	0.80	9.2	27	2.7	6.5	3.0	16	0.011	33
5.5	132 S	**1PP7 130–4TA . .**	1450	85.0	0.78	12	36	2.5	6.3	3.1	16	0.018	46
7.5	132 M	**1PP7 133–4TA . .**	1455	85.0	0.78	16.5	49	2.7	6.7	3.2	16	0.024	52
11	160 M	**1PP7 163–4TA . .**	1460	88.5	0.81	23	72	2.2	6.2	2.7	16	0.04	70
15	160 L	**1PP7 166–4TA . .**	1460	87.0	0.80	32	98	2.6	6.5	3.0	16	0.052	95
18.5	180 M	**1PP5 183–4TA . .**	1460	88.0	0.79	40	121	2.3	7.5	3.0	16	0.13	116
22	180 L	**1PP5 186–4TA . .**	1460	90.0	0.80	45	144	2.3	7.5	3.0	16	0.15	130
30	200 L	**1PP5 207–4TA . .**	1465	91.8	0.81	60	196	2.6	7.0	3.2	16	0.24	173
37	225 S	**1PP5 220–4TA . .**	1470	92.9	0.87	66	241	2.8	7.0	3.2	16	0.32	218
45	225 M	**1PP5 223–4TA . .**	1470	93.4	0.87	80	293	2.8	7.7	3.3	16	0.36	244
55	250 M	**1PP6 253–4TA . .**	1485	94.9	0.86	97	354	2.9	7.5	3.3	16	0.856	445
75	280 S	**1PP6 280–4TA . .**	1486	95.0	0.87	132	482	2.6	7.3	2.8	16	1.39	555
90	280 M	**1PP6 283–4TA . .**	1485	94.9	0.88	156	579	2.5	7.3	2.8	16	1.71	655
110	315 S	**1PP6 310–4TA . .**	1488	95.3	0.87	192	706	2.6	6.9	2.8	16	2.31	790
132	315 M	**1PP6 313–4TA . .**	1488	95.5	0.87	230	847	2.7	7.0	2.7	16	2.88	945
160	315 L	**1PP6 316–4TA . .**	1488	95.9	0.87	275	1027	2.9	7.4	2.9	16	3.46	1085
200	315 L	**1PP6 317–4TA . .**	1488	95.7	0.88	345	1284	3.2	7.3	3.1	16	4.22	1285

Forced-air cooled (surface cooled) motors without external fan and fan cover; the motors are located in the air flow of the driven fan and are adequately cooled during operation under normal conditions.

Order No. supplement

Motor type	Penultimate position: Voltage identifier 50 Hz: 230 V△ / 400 VY	400 V△ / 690 VY	500 VY	500 V△	Final position: Type of construction identifier: IM B 3	Price supplement: IM B 5	IM V1 without protective cover	IM B 35
1PP7 080 to 1PP7 096	**1**	**6**	**3**	**–**	**0**	**1**	**1**	**6**
1PP7 106 to 1PP7 166	**1**	**6**	**3**	**5**	**0**	**1**	**1**	**6**
1PP5 183 to 1PP5 223	**1**	**6**	**3**	**5**	**0**	**1**	**1**	**6**
1PP6 253 to 1PP6 313	**1**	**6**	**3**	**5**	**0**	**1**	**1**	**6**
1PP6 316 to 1PP6 318	**–**	**6**	**–**	**5**	**0**	**1** [1])	**8**	**6**

1) Additional radial supports must be provided.

For other types of construction, see "Technical information", "Types of construction".

Selection and ordering data

Rated output	Size	Order No. Order No. supplements for voltage and type of construction, see table below	Operating data at rated output: Rated speed	Efficiency η	Power factor p.f.	Rated current at 400 V	Rated torque	Starting torque (For direct-on-line starting as multiple of the rated torque)	Starting current (For direct-on-line starting as multiple of the rated current)	Stalling torque (For direct-on-line starting as multiple of the rated torque)	Torque class	Moment of inertia J	Weight Type of constr. IM B 3 approx.
kW			rpm	%		A	Nm				KL	kg m²	kg
Forced-air cooled motors 1PP7, 1PP5 (aluminium housing) and 1PP6 (cast iron housing) IP55 degree of protection, type of cooling IC 411, temperature/time classes F200 and F300													**EN 12 101-3**
	1000 rpm, 6-pole, 50 Hz												
0.37	80 M	**1PP7 080–6TA . .**	920	62.0	0.72	1.2	3.9	1.9	3.1	2.1	16	0.0015	9.6
0.55		**1PP7 083–6TA . .**	910	67.0	0.74	1.6	5.8	2.1	3.4	2.2	16	0.0018	11
0.75	90 S	**1PP7 090–6TA . .**	915	69.0	0.76	2.1	7.8	2.2	3.7	2.2	16	0.0028	14.2
1.1	90 L	**1PP7 096–6TA . .**	915	72.0	0.77	2.9	11.5	2.3	3.8	2.3	16	0.0035	17.4
1.5	100 L	**1PP7 106–6TA . .**	925	74.0	0.75	3.9	15	2.3	4	2.3	16	0.0063	25
2.2	112 M	**1PP7 113–6TA . .**	940	75.0	0.70	6.0	22	2.2	4.6	2.5	16	0.011	29
3	132 S	**1PP7 130–6TA . .**	950	79.0	0.76	7.2	30	1.9	4.2	2.2	16	0.015	44
4	132 M	**1PP7 133–6TA . .**	950	80.5	0.76	9.4	40	2.1	4.5	2.4	16	0.019	49
5.5		**1PP7 134–6TA . .**	950	81.0	0.75	14.5	55	2.3	5	2.6	16	0.025	57
7.5	160 M	**1PP7 163–6TA . .**	960	83.0	0.72	18	75	2.1	4.6	2.5	16	0.041	78
11	160 L	**1PP7 166–6TA . .**	960	87.5	0.74	24.5	109	2.3	4.8	2.6	16	0.049	104
15	180 L	**1PP5 186–6TA . .**	970	89.5	0.77	31.5	148	2.0	5.2	2.4	16	0.15	130
18.5	200 L	**1PP5 206–6TA . .**	975	90.2	0.77	38.5	181	2.7	5.5	2.8	16	0.24	173
22		**1PP5 207–6TA . .**	975	90.8	0.77	45.5	215	2.8	5.5	2.9	16	0.28	193
30	225 M	**1PP5 223–6TA . .**	978	91.8	0.77	61	294	2.8	5.7	2.9	16	0.36	234
37	250 M	**1PP6 253–6TA . .**	984	92.6	0.84	69	359	2.7	6.4	2.4	16	0.934	390
45	280 S	**1PP6 280–6TA . .**	986	92.8	0.86	81	436	2.5	6.6	2.5	16	1.37	500
55	280 M	**1PP6 283–6TA . .**	986	92.7	0.87	99	533	2.5	6.5	2.5	16	1.65	550
75	315 S	**1PP6 310–6TA . .**	990	93.9	0.85	136	723	2.7	7.0	2.9	16	2.50	740
90	315 M	**1PP6 313–6TA . .**	990	94.3	0.86	160	868	2.7	7.3	3.0	16	3.20	915
110	315 L	**1PP6 316–6TA . .**	990	94.7	0.87	192	1061	2.6	7.4	3.0	16	4.02	990
132	315 L	**1PP6 317–6TA . .**	988	94.8	0.87	230	1276	3.0	7.2	2.8	16	4.71	1160
160	315 L	**1PP6 318–6TA . .**	990	95.0	0.86	285	1543	3.1	7.5	3.0	16	5.39	1225

Forced-air cooled (surface cooled) motors without external fan and fan cover; the motors are located in the air flow of the driven fan and are adequately cooled during operation under normal conditions.

Order No. supplement

Motor type	Penultimate position: Voltage identifier, 50 Hz: 230 VΔ / 400 VY	400 VΔ / 690 VY	500 VY	500 VΔ	Final position: Type of construction identifier: IM B 3	Price supplement: IM B 5	IM V1 without protective cover	IM B 35
1PP7 080 to 1PP7 096	**1**	**6**	**3**	**–**	**0**	**1**	**1**	**6**
1PP7 106 to 1PP7 166	**1**	**6**	**3**	**5**	**0**	**1**	**1**	**6**
1PP5 183 to 1PP5 223	**1**	**6**	**3**	**5**	**0**	**1**	**1**	**6**
1PP6 253 to 1PP6 313	**1**	**6**	**3**	**5**	**0**	**1**	**1**	**6**
1PP6 316 to 1PP6 318	**–**	**6**	**–**	**5**	**0**	**1** [1])	**8**	**6**

For other types of construction, see "Technical information", "Types of construction".

1) Additional radial supports must be provided.

Rated output	Size	Order No. Order No. supplements for voltage and type of construction, see table below	Operating data at rated output: Rated speed	Efficiency η	Power factor p.f.	Rated current at 400 V	Rated torque	Starting torque (For direct-on-line starting as multiple of the rated torque)	Starting current (For direct-on-line starting as multiple of the rated current)	Stalling torque (For direct-on-line starting as multiple of the rated torque)	Torque class	Moment of inertia J	Weight Type of constr. IM B 3 approx.
kW			rpm	%		A	Nm				KL	kg m²	kg
Self-cooled motors 1LA7, 1LA5 (aluminium housing) and 1LG6 (cast iron housing) IP55 degree of protection, type of cooling IC 411, temperature/time classes F200 and F300													**EN 12 101-3**
	3000 rpm, 2-pole, 50 Hz												
0.75	80 M	**1LA7 080–2TA . .**	2830	65.0	0.82	2.1	2.5	2.3	5.6	2.4	16	0.00085	10.2
1.1		**1LA7 083–2TA . .**	2845	75.0	0.80	2.7	3.7	2.6	6.1	2.7	16	0.0011	11.9
1.5	90 S	**1LA7 090–2TA . .**	2860	76.0	0.80	3.7	5.0	2.4	5.5	2.7	16	0.0015	15.2
2.2	90 L	**1LA7 096–2TA . .**	2880	80.0	0.80	5.1	7.3	2.8	6.3	3.1	16	0.002	18
3	100 L	**1LA7 106–2TA . .**	2890	78.0	0.83	6.8	9.9	2.8	6.8	3.0	16	0.0038	24
4	112 M	**1LA7 113–2TA . .**	2905	83.0	0.83	8.5	13	2.6	7.2	2.9	16	0.0055	32
5.5	132 S	**1LA7 130–2TA . .**	2925	85.0	0.87	10.7	18	2.0	5.9	2.8	16	0.016	45
7.5		**1LA7 131–2TA . .**	2930	88.0	0.89	13.8	24	2.3	6.9	3.0	16	0.021	53
11	160 M	**1LA7 163–2TA . .**	2940	89.5	0.86	21	36	2.1	6.5	2.9	16	0.034	74
15		**1LA7 164–2TA . .**	2940	90.0	0.90	26.5	49	2.2	6.6	3.0	16	0.04	85
18.5	160 L	**1LA7 166–2TA . .**	2940	91.0	0.91	32.5	60	2.4	7.0	3.1	16	0.052	98
22	180 M	**1LA5 183–2TA . .**	2940	91.7	0.88	39	71	2.5	6.9	3.2	16	0.077	125
30	200 L	**1LA5 206–2TA . .**	2945	92.3	0.89	53	97	2.4	7.2	2.8	16	0.14	176
37		**1LA5 207–2TA . .**	2945	92.8	0.89	65	120	2.4	7.7	2.8	16	0.16	199
45	225 M	**1LA5 223–2TA . .**	2960	93.6	0.89	78	145	2.8	7.7	3.4	16	0.2	235
55	250 M	**1LG6 253–2TB . .**	2975	94.2	0.90	94	177	2.5	7.4	3.3	13	0.466	420
75	280 S	**1LG6 280–2TB . .**	2975	94.8	0.91	126	241	2.6	7.5	2.9	13	0.832	530
90	280 M	**1LG6 283–2TB . .**	2975	95.2	0.90	152	289	3.0	7.5	3.0	13	1.00	615
110	315 S	**1LG6 310–2TB . .**	2985	95.0	0.90	186	352	2.6	7.5	3.2	13	1.39	790
132	315 M	**1LG6 313–2TB . .**	2984	95.3	0.91	220	422	2.7	7.4	3.0	13	1.62	915
160	315 L	**1LG6 316–2TB . .**	2984	95.7	0.93	260	512	2.8	7.5	3.1	13	2.09	1055
200	315 L	**1LG6 317–2TB . .**	2984	95.9	0.93	325	640	2.5	7.0	2.8	13	2.46	1245
	1500 rpm, 4-pole, 50 Hz												
0.55	80 M	**1LA7 080–4TA . .**	1395	61.0	0.75	1.96	3.7	2.2	3.9	2.2	16	0.0015	10
0.75		**1LA7 083–4TA . .**	1395	72.0	0.81	1.86	5.1	2.3	4.2	2.3	16	0.0018	11.4
1.1	90 S	**1LA7 090–4TA . .**	1415	70.5	0.74	3.15	7.4	2.3	4.6	2.4	16	0.0028	14.6
1.5	90 L	**1LA7 096–4TA . .**	1420	74.1	0.74	4.0	10	2.4	5.3	2.6	16	0.0035	17.9
2.2	100 L	**1LA7 106–4TA . .**	1420	78.5	0.78	5.4	15	2.5	5.6	2.8	16	0.0048	24
3		**1LA7 107–4TA . .**	1415	79.5	0.78	7.2	20	2.7	5.6	3.0	16	0.0058	27
4	112 M	**1LA7 113–4TA . .**	1440	80.0	0.80	9.2	27	2.7	6.5	3.0	16	0.011	34
5.5	132 S	**1LA7 130–4TA . .**	1450	85.0	0.78	12	36	2.5	6.3	3.1	16	0.018	47
7.5	132 M	**1LA7 133–4TA . .**	1455	85.0	0.78	16.5	49	2.7	6.7	3.2	16	0.024	53
11	160 M	**1LA7 163–4TA . .**	1460	88.5	0.81	23	72	2.2	6.2	2.7	16	0.04	73
15	160 L	**1LA7 166–4TA . .**	1460	87.0	0.80	32	98	2.6	6.5	3.0	16	0.052	98
18.5	180 M	**1LA5 183–4TA . .**	1460	88.0	0.79	40	121	2.3	7.5	3.0	16	0.13	125
22	180 L	**1LA5 186–4TA . .**	1460	90.0	0.80	45	144	2.3	7.5	3.0	16	0.15	139
30	200 L	**1LA5 207–4TA . .**	1465	91.8	0.81	60	196	2.6	7.0	3.2	16	0.24	184
37	225 S	**1LA5 220–4TA . .**	1470	92.9	0.87	66	241	2.8	7.0	3.2	16	0.32	230
45	225 M	**1LA5 223–4TA . .**	1470	93.4	0.87	80	293	2.8	7.7	3.3	16	0.36	256
55	250 M	**1LG6 253–4TA . .**	1485	94.7	0.86	97	354	2.9	7.5	3.3	16	0.856	460
75	280 S	**1LG6 280–4TA . .**	1486	94.6	0.87	132	482	2.6	7.3	2.8	16	1.40	575
90	280 M	**1LG6 283–4TA . .**	1485	94.6	0.88	156	579	2.5	7.3	2.8	16	1.70	675
110	315 S	**1LG6 310–4TA . .**	1488	95.0	0.87	192	706	2.6	6.9	2.8	16	2.31	810
132	315 M	**1LG6 313–4TA . .**	1488	95.3	0.87	230	847	2.7	7.0	2.7	16	2.88	965
160	315 L	**1LG6 316–4TA . .**	1488	95.7	0.87	275	1027	2.9	7.4	2.9	16	3.46	1105
200	315 L	**1LG6 317–4TA . .**	1488	95.5	0.88	345	1284	3.2	7.3	3.1	16	4.22	1305

Surface-cooled motors with external fan and fan cover.

Order No. supplement

Motor type	Penultimate position: Voltage identifier, 50 Hz: 230 V Δ / 400 V Y	400 V Δ / 690 V Y	500 V Y	500 V Δ	Final position: Type of construction identifier: IM B 3	Price supplement: IM B 5	IM V1 without protective cover	IM B 35
1LA7 080 to 1LA7 096	**1**	**6**	**3**	**–**	**0**	**1**	**1**	**6**
1LA7 106 to 1LA7 166	**1**	**6**	**3**	**5**	**0**	**1**	**1**	**6**
1LA5 183 to 1LA5 223	**1**	**6**	**3**	**5**	**0**	**1**	**1**	**6**
1LG6 253 to 1LG6 313	**1**	**6**	**3**	**5**	**0**	**1**	**1**	**6**
1LG6 316 to 1LG6 318	**–**	**6**	**–**	**5**	**0**	**1** [1])	**8**	**6**

1) Additional radial supports must be provided.

For other types of construction, see "Technical information", "Types of construction".

Selection and ordering data

Rated output	Size	Order No. Order No. supplements for voltage and type of construction, see table below	Operating data at rated output: Rated speed	Efficiency η	Power factor p.f.	Rated current at 400 V	Rated torque	Starting torque (For direct-on-line starting as multiple of the rated torque)	Starting current (For direct-on-line starting as multiple of the rated current)	Stalling torque (For direct-on-line starting as multiple of the rated torque)	Torque class	Moment of inertia J	Weight Type of constr. IM B 3 approx.
kW			rpm	%		A	Nm				KL	kg m²	kg
Self-cooled motors 1LA7, 1LA5 (aluminium housing) and 1LG6 (cast iron housing) IP55 degree of protection, type of cooling IC 411, temperature/time classes F200 and F300													**EN 12 101-3**
	1000 rpm, 6-pole, 50 Hz												
0.37	80 M	**1LA7 080–6TA . .**	920	62.0	0.72	1.2	3.9	1.9	3.1	2.1	16	0.0015	9.5
0.55		**1LA7 083–6TA . .**	910	67.0	0.74	1.6	5.8	2.1	3.4	2.2	16	0.0018	11.4
0.75	90 S	**1LA7 090–6TA . .**	915	69.0	0.76	2.1	7.8	2.2	3.7	2.2	16	0.0028	14.8
1.1	90 L	**1LA7 096–6TA . .**	915	72.0	0.77	2.9	11.5	2.3	3.8	2.3	16	0.0035	18
1.5	100 L	**1LA7 106–6TA . .**	925	74.0	0.75	3.9	15	2.3	4	2.3	16	0.0063	26
2.2	112 M	**1LA7 113–6TA . .**	940	75.0	0.70	6.0	22	2.2	4.6	2.5	16	0.011	30
3	132 S	**1LA7 130–6TA . .**	950	79.0	0.76	7.2	30	1.9	4.2	2.2	16	0.015	45
4	132 M	**1LA7 133–6TA . .**	950	80.5	0.76	9.4	40	2.1	4.5	2.4	16	0.019	50
5.5		**1LA7 134–6TA . .**	950	81.0	0.75	14.5	55	2.3	5	2.6	16	0.025	58
7.5	160 M	**1LA7 163–6TA . .**	960	83.0	0.72	18	75	2.1	4.6	2.5	16	0.041	81
11	160 L	**1LA7 166–6TA . .**	960	87.5	0.74	24.5	109	2.3	4.8	2.6	16	0.049	107
15	180 L	**1LA5 186–6TA . .**	970	89.5	0.77	31.5	148	2.0	5.2	2.4	16	0.15	139
18.5	200 L	**1LA5 206–6TA . .**	975	90.2	0.77	38.5	181	2.7	5.5	2.8	16	0.24	184
22		**1LA5 207–6TA . .**	975	90.8	0.77	45.5	215	2.8	5.5	2.9	16	0.28	204
30	225 M	**1LA5 223–6TA . .**	978	91.8	0.77	61	294	2.8	5.7	2.9	16	0.36	246
37	250 M	**1LG6 253–6TA . .**	984	92.4	0.84	69	359	2.7	6.4	2.4	16	0.934	405
45	280 S	**1LG6 280–6TA . .**	986	92.7	0.86	81	436	2.5	6.6	2.5	16	1.40	520
55	280 M	**1LG6 283–6TA . .**	986	92.6	0.87	99	533	2.5	6.5	2.5	16	1.60	570
75	315 S	**1LG6 310–6TA . .**	990	93.8	0.85	136	723	2.7	7.0	2.9	16	2.50	760
90	315 M	**1LG6 313–6TA . .**	990	94.2	0.86	160	868	2.7	7.3	3.0	16	3.20	935
110	315 L	**1LG6 316–6TA . .**	990	94.6	0.87	192	1061	2.6	7.4	3.0	16	4.02	1010
132	315 L	**1LG6 317–6TA . .**	988	94.7	0.87	230	1276	3.0	7.2	2.8	16	4.71	1180
160	315 L	**1LG6 318–6TA . .**	990	94.9	0.86	285	1543	3.1	7.5	3.0	16	5.39	1245

Surface-cooled motors with external fan and fan cover.

Order No. supplement

Motor type	Penultimate position: Voltage identifier, 50 Hz: 230 V△ / 400 V⋎	400 V△ / 690 V⋎	500 V⋎	500 V△	Final position: Type of construction identifier: IM B 3	Price supplement: IM B 5	IM V1 without protective cover	IM B 35
1LA7 080 to 1LA7 096	**1**	**6**	**3**	**–**	**0**	**1**	**1**	**6**
1LA7 106 to 1LA7 166	**1**	**6**	**3**	**5**	**0**	**1**	**1**	**6**
1LA5 183 to 1LA5 223	**1**	**6**	**3**	**5**	**0**	**1**	**1**	**6**
1LG6 253 to 1LG6 313	**1**	**6**	**3**	**5**	**0**	**1**	**1**	**6**
1LG6 316 to 1LG6 318	**–**	**6**	**–**	**5**	**0**	**1** [1])	**8**	**6**

For other types of construction, see "Technical information", "Types of construction".

1) Additional radial supports must be provided.

Rated output	Size	Order No. Order No. supplements for voltage and type of construction, see table below	Operating data at rated output: Rated speed	Efficiency η	Power factor p.f.	Rated current at 400 V	Rated torque	Starting torque (For direct-on-line starting as multiple of the rated torque)	Starting current (For direct-on-line starting as multiple of the rated current)	Stalling torque (For direct-on-line starting as multiple of the rated torque)	Torque class	Moment of inertia J	Weight Type of constr. IM B 3 approx.
kW			rpm	%		A	Nm				KL	kg m²	kg
Forced-air cooled motors 1PP6 (cast iron housing) IP55 degree of protection, cooling type IC 411, temperature/time class F400													**EN 12 101-3**
	3000 rpm, 2-pole, 50 Hz												
3	100 L	**1PP6 106–2UA . .**	2875	79.0	0.85	6.5	10	2.5	6.2	2.8	16	0.0038	31
4	112 M	**1PP6 113–2UA . .**	2900	82.0	0.85	8.7	13	2.5	6.8	2.9	16	0.0055	40
5.5	132 S	**1PP6 130–2UA . .**	2920	84.0	0.89	10.8	18	1.9	5.7	2.7	16	0.016	49
7.5		**1PP6 131–2UA . .**	2930	85.0	0.89	14.5	24	2.0	6.5	2.8	16	0.021	54
11	160 M	**1PP6 163–2UA . .**	2930	87.0	0.85	21	36	1.8	6.4	2.7	16	0.034	91
15	160 M	**1PP6 164–2UA . .**	2930	86.0	0.89	27.5	49	2.0	6.5	2.80	16	0.04	99
18.5	160 L	**1PP6 166–2UA . .**	2930	87.0	0.90	34	60	2.0	7.0	2.70	16	0.052	109
22	180 M	**1PP6 183–2UA . .**	2955	93.1	0.88	39	71	2.4	7.0	3.2	16	0.086	175
30	200 L	**1PP6 206–2UA . .**	2955	92.8	0.88	53	97	2.3	6.7	3.1	16	0.151	215
37	200 L	**1PP6 207–2UA . .**	2958	93.0	0.89	65	119	2.4	7.1	3.2	16	0.182	245
45	225 M	**1PP6 223–2UA . .**	2962	95.0	0.89	77	145	2.4	7.1	3.1	16	0.266	320
55	250 M	**1PP6 253–2UA . .**	2972	94.9	0.90	94	177	2.3	6.7	2.9	16	0.466	405
75	280 S	**1PP6 280–2UB . .**	2975	94.9	0.89	128	241	2.4	6.8	2.9	13	0.832	510
90	280 M	**1PP6 283–2UB . .**	2976	95.2	0.90	152	289	2.5	7.4	3.0	13	1.00	595
110	315 S	**1PP6 310–2UB . .**	2982	95.3	0.91	184	352	2.4	6.8	2.7	13	1.39	770
132	315 M	**1PP6 313–2UB . .**	2980	95.7	0.91	220	423	2.5	6.9	2.8	13	1.62	895
160	315 L	**1PP6 316–2UB . .**	2982	96.0	0.92	265	512	2.4	7.1	2.8	13	2.09	1035
190	315 L	**1PP6 317–2UB . .**	2982	96.3	0.93	325	608	2.6	7.2	2.9	13	2.46	1225
	1500 rpm, 4-pole, 50 Hz												
2.2	100 L	**1PP6 106–4UA . .**	1410	79.0	0.78	5.5	15	2.2	5.2	2.7	16	0.0048	31
3		**1PP6 107–4UA . .**	1410	79.0	0.80	7.1	20	2.5	5.0	2.6	16	0.0058	34
4	112 M	**1PP6 113–4UA . .**	1440	82.0	0.75	9.5	27	2.7	5.7	3.0	16	0.011	42
5.5	132 S	**1PP6 130–4UA . .**	1455	81.0	0.80	12.8	36	2.5	6.3	3.0	16	0.018	51
7.5	132 M	**1PP6 133–4UA . .**	1455	84.0	0.75	17.2	49	2.7	6.7	3.1	16	0.024	58
11	160 M	**1PP6 163–4UA . .**	1460	85.0	0.80	24	72	2.2	6.2	2.7	16	0.04	95
15	160 L	**1PP6 166–4UA . .**	1460	85.0	0.78	34	98	2.4	6.4	2.8	16	0.052	108
18.5	180 M	**1PP6 183–4UA . .**	1470	91.2	0.84	35	120	2.4	6.1	2.8	16	0.122	150
22	180 L	**1PP6 186–4UA . .**	1472	92.1	0.85	40.5	143	2.4	6.4	2.9	16	0.144	175
30	200 L	**1PP6 207–4UA . .**	1470	92.6	0.86	55	195	2.4	6.4	3.1	16	0.234	215
37	225 S	**1PP6 220–4UA . .**	1480	92.9	0.86	67	239	2.6	6.5	2.8	16	0.398	280
45	225 M	**1PP6 223–4UA . .**	1480	93.6	0.86	81	290	2.7	6.6	2.9	16	0.486	320
55	250 M	**1PP6 253–4UA . .**	1485	94.5	0.87	97	354	2.5	7.4	2.9	16	0.856	445
75	280 S	**1PP6 280–4UA . .**	1484	94.6	0.87	132	483	2.4	6.7	2.8	16	1.39	554
90	280 M	**1PP6 283–4UA . .**	1486	95.1	0.86	160	578	2.6	7.3	3.0	16	1.71	655
110	315 S	**1PP6 310–4UA . .**	1488	95.3	0.87	192	706	2.7	7.0	2.8	16	2.31	790
132	315 M	**1PP6 313–4UA . .**	1488	95.6	0.88	225	847	2.6	7.1	2.8	16	2.88	945
160	315 L	**1PP6 316–4UA . .**	1490	95.8	0.88	275	1025	2.9	7.2	2.9	16	3.46	1085
200	315 L	**1PP6 317–4UA . .**	1488	95.9	0.88	345	1284	3.1	7.5	2.9	16	4.22	1285

Forced-air cooled (surface cooled) motors without external fan and fan cover; the motors are located in the air flow of the driven fan and are adequately cooled during operation under normal conditions.

Order No. supplement

Motor type	Penultimate position: Voltage identifier 50 Hz: 230 VΔ / 400 VY	400 VΔ / 690 VY	500 VY	500 VΔ	Final position: Type of construction identifier: IM B 3	Price supplement: IM B 5	IM V1 without protective cover	IM B 35
1PP6 106 to 1PP6 313	**1**	**6**	**3**	**5**	**0**	**1**	**1**	**6**
1PP6 316 to 1PP6 318	**–**	**6**	**–**	**5**	**0**	**1** [1])	**8**	**6**

For other types of construction, see "Technical information", "Types of construction".

1) Additional radial supports must be provided.

Selection and ordering data

Rated output	Size	Order No. Order No. supplements for voltage and type of construction, see table below	Operating data at rated output: Rated speed	Efficiency η	Power factor p.f.	Rated current at 400 V	Rated torque	Starting torque (For direct-on-line starting as multiple of the rated torque)	Starting current (For direct-on-line starting as multiple of the rated current)	Stalling torque (For direct-on-line starting as multiple of the rated torque)	Torque class	Moment of inertia J	Weight Type of constr. IM B 3 approx.
kW			rpm	%		A	Nm				KL	kg m²	kg
Forced-air cooled motors 1PP6 (cast iron housing) IP55 degree of protection, cooling type IC 411, temperature/time class F400													**EN 12 101-3**
	1000 rpm, 6-pole, 50 Hz												
1.5	100 L	**1PP6 106–6UA . .**	925	72.0	0.70	4.5	15	2.3	4.0	2.3	16	0.0063	31
2.2	112 M	**1PP6 113–6UA . .**	940	75.0	0.74	6.1	22	2.1	4.4	2.3	16	0.011	42
3	132 S	**1PP6 130–6UA . .**	950	77.0	0.75	7.8	30	1.6	4.1	1.7	16	0.015	52
4	132 M	**1PP6 133–6UA . .**	950	80.0	0.76	10	40	1.7	4.6	2.1	16	0.019	62
5.5	132 M	**1PP6 134–6UA . .**	950	81.0	0.76	14	55	2.0	5.0	2.3	16	0.025	72
7.5	160 M	**1PP6 163–6UA . .**	960	82.0	0.74	20	75	2.0	5.0	2.4	16	0.041	107
11	160 L	**1PP6 166–6UA . .**	960	84.0	0.74	27.5	109	2.0	5.0	2.5	16	0.049	129
15	180 L	**1PP6 186–6UA . .**	974	88.9	0.82	30	147	2.2	5.2	2.3	16	0.203	170
18.5	200 L	**1PP6 206–6UA . .**	975	89.8	0.82	36.5	181	2.2	5.3	2.3	16	0.285	200
22	200 L	**1PP6 207–6UA . .**	975	90.8	0.83	42.5	215	2.2	5.4	2.3	16	0.362	230
30	225 M	**1PP6 223–6UA . .**	980	92.3	0.84	56	292	2.7	6.3	2.8	16	0.629	315
37	250 M	**1PP6 253–6UA . .**	984	93.0	0.84	69	359	2.8	6.5	2.4	16	0.934	390
45	280 S	**1PP6 280–6UA . .**	986	92.6	0.86	82	436	2.8	6.3	2.5	16	1.37	500
55	280 M	**1PP6 283–6UA . .**	986	93.1	0.86	99	533	3.1	6.8	2.7	16	1.65	550
75	315 S	**1PP6 310–6UA . .**	990	94.0	0.84	138	723	2.7	7.0	2.9	16	2.50	740
90	315 M	**1PP6 313–6UA . .**	988	94.5	0.85	162	870	2.6	7.1	2.8	16	2.50	915
110	315 L	**1PP6 316–6UA . .**	988	94.7	0.85	198	1063	2.8	7.2	2.8	16	2.50	990
132	315 L	**1PP6 317–6UA . .**	990	95.1	0.85	235	1273	3.0	7.5	3.0	16	2.50	1160
160	315 L	**1PP6 318–6UA . .**	988	95.1	0.86	285	1546	3.1	7.5	3.0	16	2.50	1225

Forced-air cooled (surface cooled) motors without external fan and fan cover; the motors are located in the air flow of the driven fan and are adequately cooled during operation under normal conditions.

Order No. supplement

Motor type	Penultimate position: Voltage identifier, 50 Hz: 230 V Δ / 400 V Y	400 V Δ / 690 V Y	500 V Y	500 V Δ	Final position: Type of construction identifier: IM B 3	Price supplement: IM B 5	IM V1 without protective cover	IM B 35
1PP6 106 to 1PP6 313	**1**	**6**	**3**	**5**	**0**	**1**	**1**	**6**
1PP6 316 to 1PP6 318	**–**	**6**	**–**	**5**	**0**	**1** [1])	**8**	**6**

For other types of construction, see "Technical information", "Types of construction".

1) Additional radial supports must be provided.

Rated output	Size	Order No. Order No. supplements for voltage and type of construction, see table below	Operating data at rated output: Rated speed	Efficiency η	Power factor p.f.	Rated current at 400 V	Rated torque	Starting torque (For direct-on-line starting as multiple of the rated torque)	Starting current (For direct-on-line starting as multiple of the rated current)	Stalling torque (For direct-on-line starting as multiple of the rated torque)	Torque class	Moment of inertia J	Weight Type of constr. IM B 3 approx.
kW			rpm	%		A	Nm				KL	kg m²	kg
Self-cooled motors 1LA6, 1LG6 (cast iron housing) IP55 degree of protection, cooling type IC 411, temperature/time class F400													**EN 12 101-3**
	3000 rpm, 2-pole, 50 Hz												
3	100 L	**1LA6 106–2UA . .**	2875	79.0	0.85	6.5	10	2.5	6.2	2.8	16	0.0038	32
4	112 M	**1LA6 113–2UA . .**	2900	82.0	0.85	8.7	13	2.5	6.8	2.9	16	0.0055	41
5.5	132 S	**1LA6 130–2UA . .**	2920	84.0	0.89	10.8	18	1.9	5.7	2.7	16	0.016	51
7.5		**1LA6 131–2UA . .**	2930	85.0	0.89	14.5	24	2.0	6.5	2.8	16	0.021	56
11	160 M	**1LA6 163–2UA . .**	2930	87.0	0.85	21	36	1.8	6.4	2.7	16	0.034	93
15	160 M	**1LA6 164–2UA . .**	2930	86.0	0.89	27.5	49	2.0	6.5	2.80	16	0.04	102
18.5	160 L	**1LA6 166–2UA . .**	2930	87.0	0.90	34	60	2.0	7.0	2.70	16	0.05	112
22	180 M	**1LG6 183–2UA . .**	2955	92.6	0.88	39	71	2.4	7.0	3.2	16	0.086	180
30	200 L	**1LG6 206–2UA . .**	2955	92.2	0.88	53	97	2.3	6.7	3.1	16	0.151	225
37	200 L	**1LG6 207–2UA . .**	2958	92.5	0.89	65	119	2.4	7.1	3.2	16	0.182	255
45	225 M	**1LG6 223–2UA . .**	2962	94.6	0.89	77	145	2.4	7.1	3.1	16	0.266	330
55	250 M	**1LG6 253–2UA . .**	2972	94.3	0.90	94	177	2.3	6.7	2.9	16	0.466	420
75	280 S	**1LG6 280–2UB . .**	2975	94.5	0.89	128	241	2.4	6.8	2.9	13	0.832	530
90	280 M	**1LG6 283–2UB . .**	2976	94.9	0.90	152	289	2.5	7.4	3.0	13	1.00	615
110	315 S	**1LG6 310–2UB . .**	2982	94.7	0.91	184	352	2.4	6.8	2.7	13	1.39	790
132	315 M	**1LG6 313–2UB . .**	2980	95.2	0.91	220	423	2.5	6.9	2.8	13	1.62	915
160	315 L	**1LG6 316–2UB . .**	2982	95.6	0.92	265	512	2.4	7.1	2.8	13	2.09	1055
190	315 L	**1LG6 317–2UB . .**	2982	95.9	0.93	325	608	2.6	7.2	2.9	13	2.46	1245
	1500 rpm, 4-pole, 50 Hz												
2.2	100 L	**1LA6 106–4UA . .**	1410	79.0	0.78	5.5	15	2.2	5.2	2.7	16	0.0048	32
3		**1LA6 107–4UA . .**	1410	79.0	0.80	7.1	20	2.5	5.0	2.6	16	0.0058	34
4	112 M	**1LA6 113–4UA . .**	1440	82.0	0.75	9.5	27	2.7	5.7	3.0	16	0.011	43
5.5	132 S	**1LA6 130–4UA . .**	1455	81.0	0.80	12.8	36	2.5	6.3	3.0	16	0.018	53
7.5	132 M	**1LA6 133–4UA . .**	1455	84.0	0.75	17.2	49	2.7	6.7	3.1	16	0.024	60
11	160 M	**1LA6 163–4UA . .**	1460	85.0	0.80	24	72	2.2	6.2	2.7	16	0.04	97
15	160 L	**1LA6 166–4UA . .**	1460	85.0	0.78	34	98	2.4	6.4	2.8	16	0.052	110
18.5	180 M	**1LG6 183–4UA . .**	1470	90.7	0.84	35	120	2.4	6.1	2.8	16	0.122	155
22	180 L	**1LG6 186–4UA . .**	1472	91.7	0.85	40.5	143	2.4	6.4	2.9	16	0.144	180
30	200 L	**1LG6 207–4UA . .**	1470	92.2	0.86	55	195	2.4	6.4	3.1	16	0.234	225
37	225 S	**1LG6 220–4UA . .**	1480	92.6	0.86	67	239	2.6	6.5	2.8	16	0.398	290
45	225 M	**1LG6 223–4UA . .**	1480	93.3	0.86	81	290	2.7	6.6	2.9	16	0.486	330
55	250 M	**1LG6 253–4UA . .**	1485	94.2	0.87	97	354	2.5	7.4	2.9	16	0.856	460
75	280 S	**1LG6 280–4UA . .**	1484	94.2	0.87	132	483	2.4	6.7	2.8	16	1.39	574
90	280 M	**1LG6 283–4UA . .**	1486	94.7	0.86	160	578	2.6	7.3	3.0	16	1.71	675
110	315 S	**1LG6 310–4UA . .**	1488	95.0	0.87	192	706	2.7	7.0	2.8	16	2.31	810
132	315 M	**1LG6 313–4UA . .**	1488	95.3	0.88	225	847	2.6	7.1	2.8	16	2.88	965
160	315 L	**1LG6 316–4UA . .**	1490	95.6	0.88	275	1025	2.9	7.2	2.9	16	3.46	1105
200	315 L	**1LG6 317–4UA . .**	1488	95.7	0.88	345	1284	3.1	7.5	2.9	16	4.22	1305

Surface-cooled motors with integral fan and fan cover.

Order No. supplement

Motor type	Penultimate position: Voltage identifier, 50 Hz: 230 VΔ / 400 VY	400 VΔ / 690 VY	500 VY	500 VΔ	Final position: Type of construction identifier: IM B 3	Price supplement: IM B 5	IM V1 without protective cover	IM B 35
1LA6 106 to 1LG6 313	**1**	**6**	**3**	**5**	**0**	**1**	**1**	**6**
1LG6 316 to 1LG6 318	**–**	**6**	**–**	**5**	**0**	**1** [1])	**8**	**6**

For other types of construction, see "Technical information", "Types of construction".

1) Additional radial supports must be provided.

Selection and ordering data

Rated output	Size	Order No. Order No. supplements for voltage and type of construction, see table below	Operating data at rated output: Rated speed	Efficiency η	Power factor p.f.	Rated current at 400 V	Rated torque	Starting torque (For direct-on-line starting as multiple of the rated torque)	Starting current (For direct-on-line starting as multiple of the rated current)	Stalling torque (For direct-on-line starting as multiple of the rated torque)	Torque class	Moment of inertia J	Weight Type of constr. IM B 3 approx.
kW			rpm	%		A	Nm				KL	kg m²	kg
Self-cooled motors 1LA6, 1LG6 (cast iron housing) IP55 degree of protection, cooling type IC 411, temperature/time class F400													**EN 12 101-3**
	1000 rpm, 6-pole, 50 Hz												
1.5	100 L	**1LA6 106–6UA . .**	925	72.0	0.70	4.5	15	2.3	4.0	2.3	16	0.0063	32
2.2	112 M	**1LA6 113–6UA . .**	940	75.0	0.74	6.1	22	2.1	4.4	2.3	16	0.011	43
3	132 S	**1LA6 130–6UA . .**	950	77.0	0.75	7.8	30	1.6	4.1	1.7	16	0.015	54
4	132 M	**1LA6 133–6UA . .**	950	80.0	0.76	10	40	1.7	4.6	2.1	16	0.019	63
5.5	132 M	**1LA6 134–6UA . .**	950	81.0	0.76	14	55	2.0	5.0	2.3	16	0.025	74
7.5	160 M	**1LA6 163–6UA . .**	960	82.0	0.74	20	75	2.0	5.0	2.4	16	0.041	110
11	160 L	**1LA6 166–6UA . .**	960	84.0	0.74	27.5	109	2.0	5.0	2.5	16	0.049	132
15	180 L	**1LG6 186–6UA . .**	974	88.7	0.82	30	147	2.2	5.2	2.3	16	0.203	175
18.5	200 L	**1LG6 206–6UA . .**	975	89.4	0.82	36.5	181	2.2	5.3	2.3	16	0.285	210
22	200 L	**1LG6 207–6UA . .**	975	90.5	0.83	42.5	215	2.2	5.4	2.3	16	0.362	240
30	225 M	**1LG6 223–6UA . .**	980	92.2	0.84	56	292	2.7	6.3	2.8	16	0.629	325
37	250 M	**1LG6 253–6UA . .**	984	92.6	0.84	69	359	2.8	6.5	2.4	16	0.934	405
45	280 S	**1LG6 280–6UA . .**	986	92.3	0.86	82	436	2.8	6.3	2.5	16	1.37	520
55	280 M	**1LG6 283–6UA . .**	986	92.8	0.86	99	533	3.1	6.8	2.7	16	1.65	570
75	315 S	**1LG6 310–6UA . .**	990	93.7	0.84	138	723	2.7	7.0	2.9	16	2.50	760
90	315 M	**1LG6 313–6UA . .**	988	94.2	0.85	162	870	2.6	7.1	2.8	16	3.20	935
110	315 L	**1LG6 316–6UA . .**	988	94.5	0.85	198	1063	2.8	7.2	2.8	16	4.02	1010
132	315 L	**1LG6 317–6UA . .**	990	94.9	0.85	235	1273	3.0	7.5	3.0	16	4.71	1180
160	315 L	**1LG6 318–6UA . .**	988	94.9	0.86	285	1546	3.1	7.5	3.0	16	5.39	1245

Surface-cooled motors with integral fan and fan cover.

Order No. supplement

Motor type	Penultimate position: Voltage identifier 50 Hz: 230 V△ / 400 V⋎	400 V△ / 690 V⋎	500 V⋎	500 V△	Final position: Type of construction identifier: IM B 3	Price supplement IM B 5	IM V1 without protective cover	IM B 35
1LA6 106 to 1LG6 313	**1**	**6**	**3**	**5**	**0**	**1**	**1**	**6**
1LG6 316 to 1LG6 318	**–**	**6**	**–**	**5**	**0**	**1** [1])	**8**	**6**

For other types of construction, see "Technical information", "Types of construction".

1) Additional radial supports must be provided.

Additional order suffix **–Z** with order code	Special designs	Motor type – Size						
		1PP7	1PP5	1PP6	1LA7	1LA5	1LG6	1LA6
Windings and motor protection								
A11	Motor protection by means of PTC thermistor with 3 built-in temperature sensors for shutdown [1])	80 – 160	180 – 225	100 – 315	80 – 160	180 – 225	180 – 315	100 – 160
A12	Motor protection by means of PTC thermistor with 6 built-in temperature sensors for warning and shutdown [1])	80 – 160	180 – 225	100 – 315	80 – 160	180 – 225	180 – 315	100 – 160
A23	Motor temperature sensing with built-in KTY 84-130 temperature sensors [1])	80 – 160	180 – 225	100 – 315	80 – 160	180 – 225	180 – 315	100 – 160
Paint finish								
	Special paintwork in RAL 7030 stone grey	Standard design (without order code)						
M16	RAL 1002 sand yellow	80 – 160	180 – 225	100 – 315	80 – 160	180 – 225	180 – 315	100 – 160
M17	RAL 1013 pearl white							
M18	RAL 3000 flame red							
K27	RAL 6011 mignonette green							
M19	RAL 6021 pale green							
M20	RAL 7001 silver grey							
K28	RAL 7031 bluish grey							
L42	RAL 7032 pebble grey							
M21	RAL 7035 light grey							
M22	RAL 9001 cream white							
M23	RAL 9002 grey white							
L43	RAL 9005 jet black							
Y54 • And special paintwork RAL	Special paintwork in other colors: RAL 1015, 1019, 2003, 2004, 3007, 5007, 5009, 5010, 5012, 5015, 5017, 5018, 5019, 6019, 7000, 7004, 7011, 7016, 7022, 7033	80 – 160	180 – 225	100 – 315	80 – 160	180 – 225	180 – 315	100 – 160
K23	Unpainted (only cast iron parts primed)	80 – 160	180 – 225	100 – 315	80 – 160	180 – 225	180 – 315	100 – 160
K24	Unpainted, only primed	80 – 160	180 – 225	100 – 315	80 – 160	180 – 225	180 – 315	100 – 160
Mechanical design								
K40	Regreasing device	100 – 160	180 – 225	100 – 315	100 – 160	180 – 225	180 – 315	100 – 160
L13	External earthing	80 – 160	180 – 225	100 – 315	80 – 160	180 – 225	180 – 315	100 – 160
K31	Extra rating plate, loose	Standard version						
Y82 • And order code	Extra rating plate	80 – 160	180 – 225	100 – 315	80 – 160	180 – 225	180 – 315	100 – 160
K45	Anti-condensation heating for 230 V	80 – 160	180 – 225	100 – 315	80 – 160	180 – 225	180 – 315	100 – 160
K46	Anti-condensation heating for 115 V	80 – 160	180 – 225	100 – 315	80 – 160	180 – 225	180 – 315	100 – 160
L99	Wire-lattice pallet	80 – 160	180	100 – 180	80 – 150	180	180	100 – 160
Notes on safety and commissioning/certification								
B02	Factory test certificate 2.3 acc. to EN 10 204 (routine test)	80 – 160	180 – 225	100 – 315	80 – 160	180 – 225	180 – 315	100 – 160
Additional suffixes								
A60	Installation of 3 PT 100 G resistance thermometers	–	225	225 – 315	–	225	225 – 315	–
A61	Installation of 6 PT 100 G resistance thermometers	–	225	225 – 315	–	225	225 – 315	–
G50	Measuring nipples for SPM shock pulse measurement for bearing monitoring	–	180 – 225	180 – 315	–	180 – 225	180 – 315	–
K50	IP65 degree of protection	80 – 160	180 – 225	100 – 315	80 – 160	180 – 225	180 – 315	100 – 160
L03	Vibration-proof version	80 – 160	180 – 225	100 – 160	80 – 160	180 – 225	–	100 – 160
L51	Protruding cable end – right side	80 – 160	180 – 225	100 – 315	80 – 160	180 – 225	180 – 315	100 – 160
L52	Protruding cable end – left side	80 – 160	180 – 225	100 – 315	80 – 160	180 – 225	180 – 315	100 – 160
L68	Full-key balancing	80 – 160	180 – 225	100 – 315	80 – 160	180 – 225	180 – 315	100 – 160

• Additional plain text required.

1) For appropriate tripping unit, see Catalog LV 10.

Notes

Squirrel-cage motors
Dimensions

7/2	1LA7, 1MA7 · Frame sizes 56 M to 160 L 1LA5 · Frame sizes 180 M to 225 M
7/4	1LA9 · Frame sizes 56 to 200 L
7/6	1LA6, 1MA6 · Frame sizes 100 L to 160 L
7/8	1MA6 · Frame sizes 180 M to 315 L
7/10	1LG4 · Frame sizes 180 M to 315 L
7/12	1LG6 · Frame sizes 180 M to 315 L
7/14	1LA8 · Frame sizes 315 to 450
7/16	1MJ6, 1MJ7 · Frame sizes 71 M to 160 L
7/18	1MJ6 · Frame sizes 180 M to 315 M 1MJ8 · Frame sizes 315 M to 355
7/20	Flange dimensions Dimensions for smoke extraction motors and 1MJ1 motors on request

Dimension sheet generator:

(part of the SD Configurator)

The SD Configurator contains a dimension drawing for each motor in this catalog. Provided that a complete Order No. is entered or parameterized with or without an order code, a dimension drawing can be called up under the "Documentation" tab.

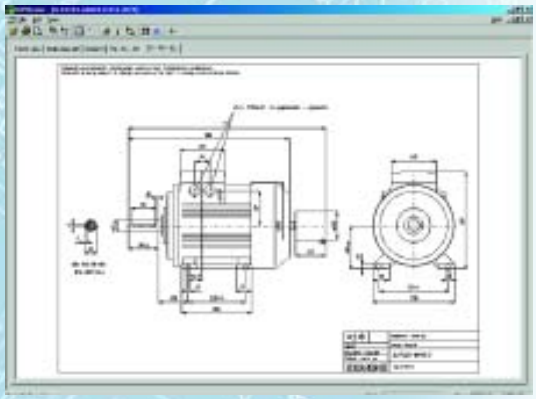

These dimension drawings can be presented and printed in various different views and windows.
The corresponding dimension drawings can be exported, saved and processed in DXF format (interchange/import format for CAD systems) or as bitmap graphics.
The SD configurator has been integrated into the electronic catalogue CA 01 as a selection aid (for further information see "Technical Information", "Project planning aids").

The interactive catalogue CA 01 can be ordered from your local Siemens sales representative or on the Internet under

http://www.siemens.com/automation/CA01

At this address, you will also find links to Tips and Tricks, and downloads for updating the functions or content.

Order No. of the CA 01 10/2003 English
E86060-D4001-A110-C1-7600

Notes on the dimensions

- Dimension drawings according to DIN EN 50 347 and IEC 60 072.
- Fits
  The shaft extensions specified in the dimension tables (DIN 748) and centering spigot diameters (DIN 42 948) are machined with the following fits:

Dimension designation	ISO fit DIN ISO 286-2	
D, DA	to 30	j6
	over 30 to 50	k6
	over 50	m6
N	to 250	j6
	over 250	h6
F, FA		h9

  The drilled holes of couplings and belt pulleys should have an ISO fit of at least H7.
- Dimensional tolerances
  For the following dimensions, the permissible deviations are given below:

Dimension designation	Dimension	Permitted deviation
A, B	to 250	± 0.75
	over 250 to 500	± 1.0
	over 500 to 750	± 1.5
	over 750 to 1000	± 2.0
	over 1000	± 2.5
M	to 200	± 0.25
	over 200 to 500	± 0.5
	over 500	± 1.0
H	to 250	– 0.5
	over 250	– 1.0
E, EA		– 0.5

  Keyways and featherkeys (dimensions GA, GC, F and FA) are made in compliance with DIN 6885 Part 1.
- All dimension data is specified in mm.

7

Dimensions

1LA7, 1MA7 · Frame sizes 56 M to 160 L
1LA5 · Frame sizes 180 M to 225 M

IM B 3

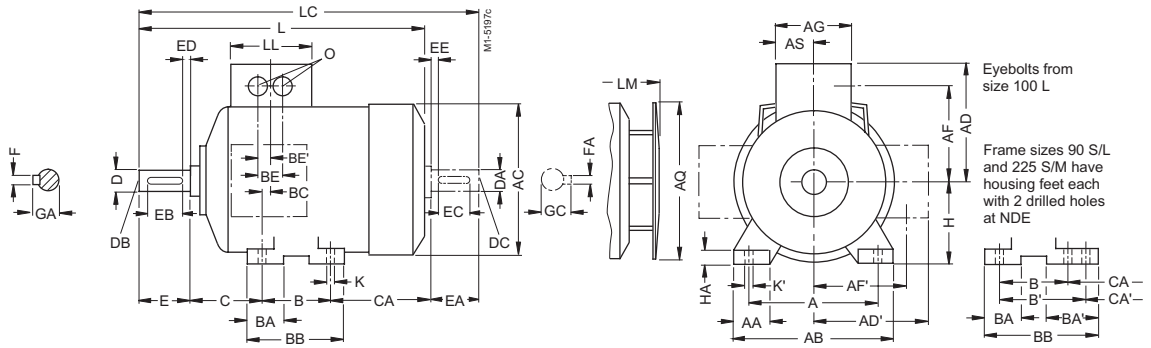

IM B 5 and IM V1 · For flange dimensions, see Page 7/20 (Z = Number of fixing holes)

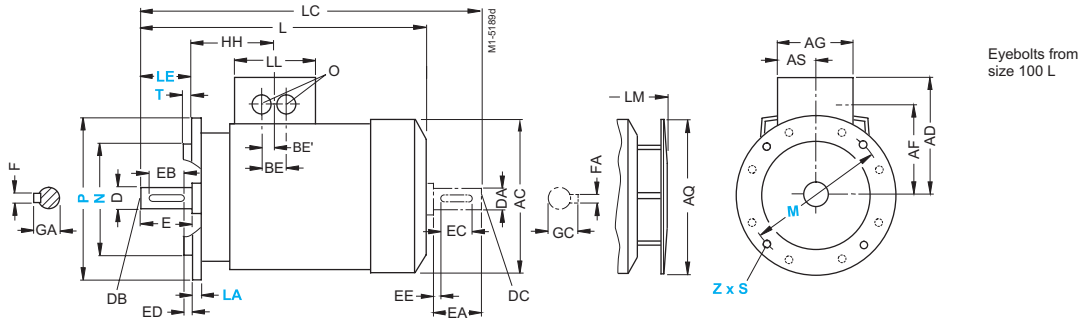

For motor Size	Type 1LA7 . . . 1MA7 . . .	No. of poles	Dimension drawing according to **IEC** A	AA	AB	AC[1])	AD	AD'	AF	AF'	AG	AQ	AS	B	B'	BA	BA'	BB	BC	BE	BE'	C	CA	CA'
56 M	1LA7 050 ● 1LA7 053 ●	2 to 4	90	25	110	116	101	101	78	78	74	–	37	71	–	28	–	87	34	32	18	36	53	–
63 M	. . . . 060 063	2 to 6	100	27	120	124	101 (135)	101	78 (95)	78	74 (120)	124	37 (60)	80	–	28	–	96	30 (52.5)	32	18 (16)	40	66	–
71 M	. . . . 070 073	2 to 8	112	27	132	145	111 (145)	111	88 (105)	88	74 (120)	124	37 (60)	90	–	27	–	106	18 (41.5)	32	18 (16)	45	83	–
80 M	. . . . 080 083	2 to 8	125	30.5	150	163	120 (154)	120 (154)	97 (114)	97 (114)	75 (120)	124	37.5 (60)	100	–	32	–	118	14 (36)	32	18 (16)	50	94 134[4])	–
90 S 90 L	. . . . 090 096	2 to 8	140	30.5	165	180	128 (162)	128 (162)	105 (122)	105 (122)	75 (120)	170	37.5 (60)	100* 100	125 125*	33	54	143	23 (46)	32	18 (16)	56	143	118
100 L	. . . . 106 107	2 to 8 4 and 8	160	42	196	203	135	163	78	123	120	170	60	140	–	47	–	176	39	42	21	63	125	–
112 M	 113	2 to 8	190	46	226	227	148	176	91	136	120	170	60	140	–	47	–	176	32	42	21	70	141	–
132 S	. . . . 130 131	2 to 8 2	216	53	256	267	167	194	107	154	140	250	70	140	–	49	–	180	39	42	21	89	162.5	–
132 M	. . . . 133 134	4 to 8 6	216	53	256	267	167	194	107	154	140	250	70	178	–	49	–	218	39	42	21	89	124.5 162.5[5])	–
160 M	. . . . 163 164	2 to 8 2 and 8	254	60	300	320	197	226	127	183	165	250	82.5	210	–	57	–	256	52.5	54	27	108	183	–
160 L	 166	2 to 8	254	60	300	320	197	226	127	183	165	250	82.5	254	–	57	–	300	52.5	54	27	108	139 179[6])	–
180 M	1LA5 183	2 and 4	279	69.5	339	363	258	258	216	216	152	340	71	241	–	50	–	287	38	54	27	121	259	–
180 L	1LA5 186	4 to 8	279	69.5	339	363	258	258	216	216	152	340	71	279	–	50	–	325	38	54	27	121	221	–
200 L	1LA5 206 1LA5 207	2 and 6 2 to 8	318	83	388	402	305	305	252	252	260	340	96	305	–	58.5	–	355	45	85	42.5	133	239	– –
225 S 225 M	1LA5 220 1LA5 223	4 and 8 2 4 to 8	356 356	103 103	426 426	402 402	305 305	305 305	252 252	252 252	260 260	340 340	96 96	286* 286	311 311*	58 58	83 83	361 361	36 36	85 85	42.5 42.5	149 149	248.5	 223.5

■ The dimensions in brackets apply to 1MA7.

■ For 1LA in pole-changing version (6 or 9 terminals), the dimensions of the basic version apply.

* This dimension is assigned in DIN EN 50347 to the frame size listed.

● The motors of frame size 56 M are non-ventilated.

1) Measured across the screw heads.

2) With a cast-on terminal housing, 4 knockout openings are provided for metric threads.

1LA7, 1MA7 · Frame sizes 56 M to 160 L
1LA5 · Frame sizes 180 M to 225 M

IM B 35 · For flange dimensions, see Page 7/20 (Z = Number of fixing holes)

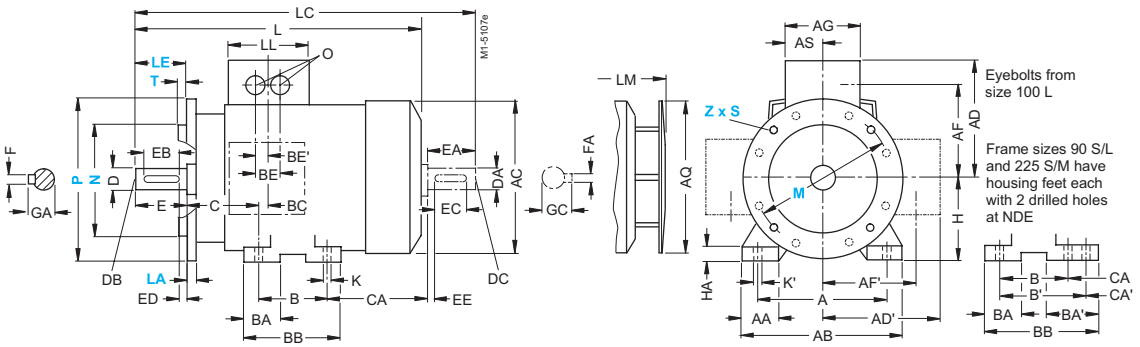

IM B 14 · For flange dimensions, see Page 7/20 (Z = Number of fixing holes)

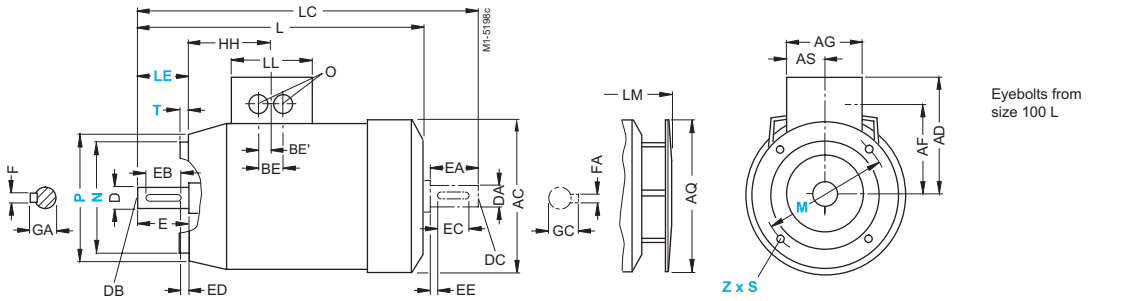

H	HA	HH	K	K'	L	LC	LL	LM	O	Drive-end shaft extension D	DB	E	EB	ED	F	GA	Non-drive-end shaft extension DA	DC	EA	EC	EE	FA	GC
56	6	69.5	5.8	9	169	200	74	–	1x M16 x 1.5 1x M25 x 1.5	9	M3	20	14	3	3	10.2	9	M3	20	14	3	3	10.2
63	7	69.5 (92.5)	7	10	202.5	232	74 (120)	231.5	1x M16 x 1.5 1x M25 x 1.5	11	M4	23	16	3.5	4	12.5	11	M4	23	16	3.5	4	12.5
71	7	63.5 (86.5)	7	10	240	278	74 (120)	268	1x M16 x 1.5 1x M25 x 1.5	14	M5	30	22	4	5	16	14	M5	30	22	4	5	16
80	8	63.5 (86)	9.5	13.5	273.5 308.5[4])	324 364	75 (120)	299.5 334.5[4])	1x M16 x 1.5 1x M25 x 1.5	19	M6	40	32	4	6	21.5	19	M6	40	32	4	6	21.5
90	10	79 (101.5)	10	14	331	389	75 (120)	382.5	1x M16 x 1.5 1x M25 x 1.5	24	M8	50	40	5	8	27	19	M6	40	32	4	6	21.5
100	12	102	12	16	372	438	120	423.5	2x M32 x 1.5[2])	28	M10	60	50	5	8	31	24	M8	50	40	5	8	27
112	12	102	12	16	393	461	120	444.5	2x M32 x 1.5[2])	28	M10	60	50	5	8	31	24	M8	50	40	5	8	27
132	15	128	12	16	452.5[3])	551.5	140	505[3])	2x M32 x 1.5[2])	38	M12	80	70	5	10	41	38	M12	80	70	5	10	41
132	15	128	12	16	452.5[3]) 490.5[5])	551.5 589.5[5])	140	505[3]) 543[5])	2x M32 x 1.5[2])	38	M12	80	70	5	10	41	38	M12	80	70	5	10	41
160	18	160.5	15	19	588	721	165	640.5	2x M32 x 1.5[2])	42	M16	110	90	10	12	45	42	M16	110	90	10	12	45
160	18	160.5	15	19	588 628[6])	721 761[6])	165	640.5 680.5[6])	2x M32 x 1.5[2])	42	M16	110	90	10	12	45	42	M16	110	90	10	12	45
180	18	159	15	19	712	841	132	793.5	2 x M40 x 1.5	48	M16	110	100	5	14	51.5	48	M16	110	100	5	14	51.5
180	18	159	15	19	712	841	132	793.5	2 x M40 x 1.5	48	M16	110	100	5	14	51.5	48	M16	110	100	5	14	51.5
200	24	178	19	25	768.5	897	192	850	2 x M50 x 1.5	55	M20	110	100	5	16	59	55	M20	110	100	5	16	59
225	24	184.5	19	25	806	933.5	192	887.5	2 x M50 x 1.5	60	M20	140	125	7.5	18	64	55	M20	110	100	5	16	59
225	24	184.5	19	25	776 806	903.5 933.5	192	857.5 887.5	2 x M50 x 1.5	55 60	M20 M20	110 140	100 125	5 7.5	16 18	59 64	55	M20	110	100	5	16	59

3) In a low-noise version, the dimension L is 8 mm greater and the dimension LM is 11.5 mm greater.

4) For 1MA7 083-6.

5) For 1MA7 133-4.

6) For 1MA7 166-4 and 1MA7 166-6.

1LA9 · Frame sizes 56 M to 200 L

IM B 3

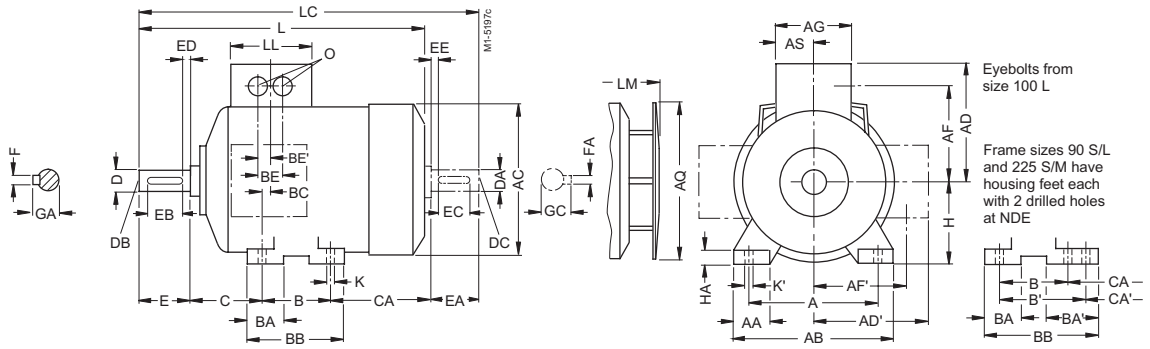

IM B 5 and IM V1 · For flange dimensions, see Page 7/20 (Z = Number of fixing holes)

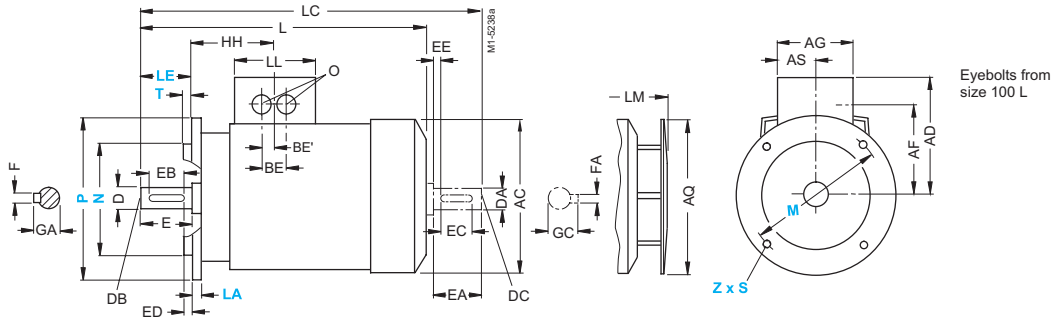

For motor Size	Type 1LA9 . . .	No. of poles	Dimension drawing according to **IEC** A	AA	AB	AC[1])	AD	AD'	AF	AF'	AG	AQ	AS	B	B'	BA	BA'	BB	BC	BE	BE'	C	CA	CA'
56 M	. . . . 050 ●	2 and 4	90	25	110	116	101	101	78	78	74	–	37	71	–	28	–	87	34	32	18	36	53	–
	. . . . 053 ●										37													
63 M	 060	2 and 4	100	27	120	124	101	101	78	78	74	124	37	80	–	28	–	96	30	32	18	40	66	–
	 063										37												92	
71 M	 070	2 and 4	112	30.5	132	145	111	111	88	88	74	124	37	90	–	27	–	106	18	32	18	45	83	–
	 073										37													
80 M	 080	2 and 4	125	30.5	150	163	120	120	97	97	75	124	37.5	100	–	32	–	118	14	32	18	50	94	–
	 083																						134	
90 S	 090	2 to 6	140	30.5	165	180	128	128	105	105	75	170	37.5	100*	125	33	54	143	23	32	18	56	143	118
90 L	. . . . 096-6K	2 to 6												100	125*									
	 096																							
100 L	 106	2 to 6	160	42	196	203	135	163	78	123	120	170	60	140	–	47	–	176	39	42	21	63	160	–
	 107	4																					195[5])	
112 M	 113	2 to 6	190	46	226	227	148	176	91	136	120	170	60	140	–	47	–	176	32	42	21	70	179	–
132 S	 130	2 and 4	216	53	256	267	167	194	107	154	140	250	70	140	–	49	–	180	39	42	21	89	162.5	–
	 131	2																					200.5	
132 M	 133	6	216	53	256	267	167	194	107	154	140	250	70	178	–	49	–	218	39	42	21	89	124.5	–
	 133	4																					162.5	
	 134	6																						
160 M	 163	2 to 6	254	60	300	320	197	226	127	183	165	250	82.5	210	–	57	–	256	52.5	54	27	108	183	–
	 164	2																						
160 L	 166	2 to 6	254	60	300	320	197	226	127	183	165	250	82.5	254	–	57	–	300	52.5	54	27	108	179	–
180 M	 183	2 and 4	279	69.5	339	363	258	258	216	216	152	340	71	241	–	50	–	287	38	54	27	121	259	–
180 L	 186	4 and 6	279	69.5	339	363	258	258	216	216	152	340	71	279	–	50	–	325	38	54	27	121	221	–
200 L	 206	2 and 6	318	83	388	402	305	305	252	252	260	340	96	305	–	58.5	–	355	45	85	42.5	133	239	–
	 207	2 to 6																						

* This dimension is assigned in DIN EN 50347 to the frame size listed.

● The motors of frame size 56 M are non-ventilated.

1) Measured across the screw heads.

2) With a cast-on terminal housing, 4 knockout openings are provided for metric threads.

3) For 1LA9 096-6KA.

4) For 1LA9 096-2 and 1LA9 096-4.

5) For 1LA9 107-4KA.

IM B 35 · For flange dimensions, see Page 7/20 (Z = Number of fixing holes)

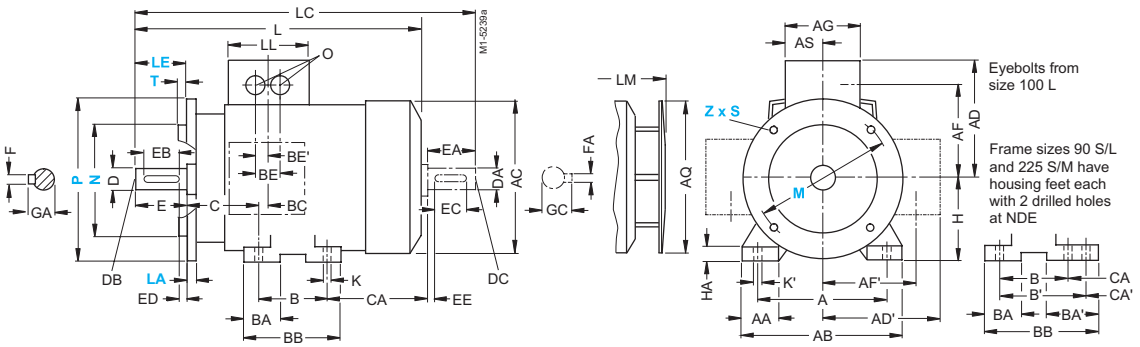

IM B 14 · For flange dimensions, see Page 7/20 (Z = Number of fixing holes)

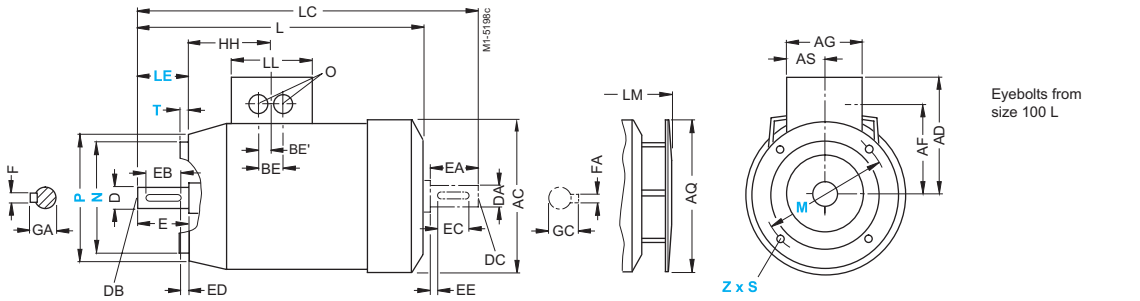

H	HA	HH	K	K'	L	LC	LL	LM	O	Drive-end shaft extension D	DB	E	EB	ED	F	GA	Non-drive-end shaft extension DA	DC	EA	EC	EE	FA	GC
56	6	69.5	5.8	9	169	200	74	–	1x M16 x 1.5 1x M25 x 1.5	9	M3	20	14	3	3	10.2	9	M3	20	14	3	3	10.2
63	7	69.5	7	10	202.5 228.5	232 258	74	231.5 257.5	1x M16 x 1.5 1x M25 x 1.5	11	M4	23	16	3.5	4	12.5	11	M4	23	16	3.5	4	12.5
71	7	63.5	7	10	240	278	74	268	1x M16 x 1.5 1x M25 x 1.5	14	M5	30	22	4	5	16	14	M5	30	22	4	5	16
80	8	63.5	9.5	13.5	273.5 308.5	324 364	75	299.5 334.5	1x M16 x 1.5 1x M25 x 1.5	19	M6	40	32	4	6	21.5	19	M6	40	32	4	6	21.5
90	10	79	10	14	331 376[3]) 358[4])	389 434[3]) 414[4])	75	382.5 427.5[3]) 409.5[4])	1x M16 x 1.5 1x M25 x 1.5	24	M8	50	40	5	8	27	19	M6	40	32	4	6	21.5
100	12	102	12	16	407 442[5])	473 508[5])	120	458.5 493[5])	2x M32 x 1.5[2])	28	M10	60	50	5	8	31	24	M8	50	40	5	8	27
112	12	102	12	16	431	499	120	482.5	2x M32 x 1.5[2])	28	M10	60	50	5	8	31	24	M8	50	40	5	8	27
132	15	128	12	16	452.5 490.5	551.5 589.5	140	505 543	2x M32 x 1.5[2])	38	M12	80	70	5	10	41	38	M12	80	70	5	10	41
132	15	128	12	16	452.5 490.5	551.5 589.5	140	505 543	2x M32 x 1.5[2])	38	M12	80	70	5	10	41	38	M12	80	70	5	10	41
160	18	160.5	15	19	588	721	165	640.5	2x M40 x 1.5[2])	42	M16	110	90	10	12	45	42	M16	110	90	10	12	45
160	18	160.5	15	19	628	761	165	680.5	2x M40 x 1.5[2])	42	M16	110	90	10	12	45	42	M16	110	90	10	12	45
180	18	159	15	19	712	841	132	793.5	2 x M40 x 1.5	48	M16	110	100	5	14	51.5	48	M16	110	100	5	14	51.5
180	18	159	15	19	712	841	132	793.5	2 x M40 x 1.5	48	M16	110	100	5	14	51.5	48	M16	110	100	5	14	51.5
200	24	178	19	25	768.5	897	192	850	2 x M50 x 1.5	55	M20	110	100	5	16	59	55	M20	110	100	5	16	59

1LA6, 1MA6 · Frame sizes 100 L to 160 L

IM B 3

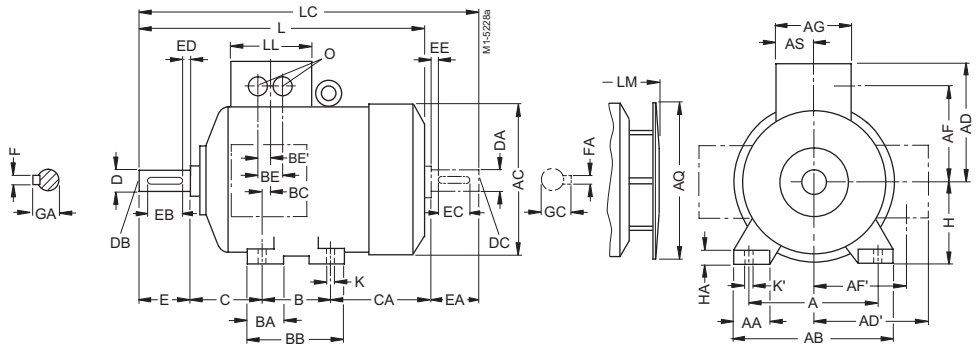

IM B 5 and IM V1 · For flange dimensions, see Page 7/20 (Z = Number of fixing holes)

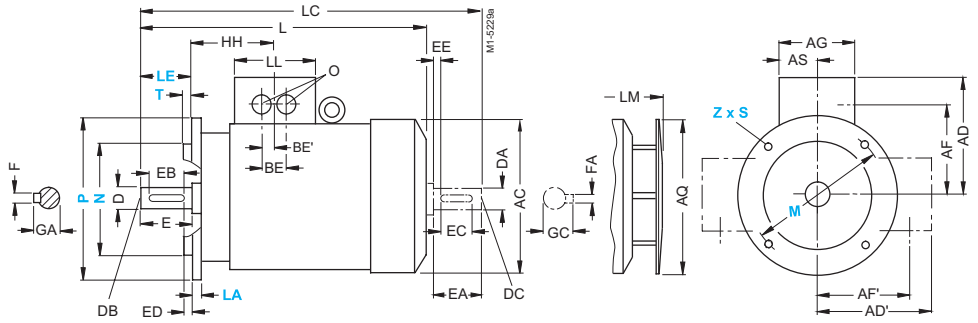

For motor Size	Type 1LA6 . . . 1MA6 . . .	No. of poles	Dimension drawing according to **IEC** A	AA	AB	AC[1])	AD	AD'	AF	AF'	AG	AQ	AS	B	BA	BB	BC	BE	BE'	C	CA	H	HA
100 L	 106	2 to 8	160	40	196	201	164	164	124	124	121	170	60.5	140	46	180	42	42	21	63	125	100	12
	 107	4 and 8																					
112 M	 113	2 to 8	190	42.5	226	225.5	178	178	138	138	121	170	60.5	140	46	180	34	42	21	70	141	112	15
132 S	 130	2 to 8	216	50	256	265	194	194	154	154	141	250	70.5	140	47	180	42	42	21	89	162.5	132	17
	 131	2																					
132 M	 133	4 to 8	216	50	256	265	194	194	154	154	141	250	70.5	178	49	218	42	42	21	89	124.5	132	17
	 134	6																					
160 M	 163	2 to 8	254	60	300	320	226	226	183	183	166	250	83	210	63	256	52	54	27	108	183	160	18
	 164	2 and 8																					
160 L	 166	2 to 8	254	60	300	320	226	226	183	183	166	250	83	254	63	300	52	54	27	108	139	160	18

1) Measured across the screw heads.

IM B 35 · For flange dimensions, see Page 7/20 (Z = Number of fixing holes)

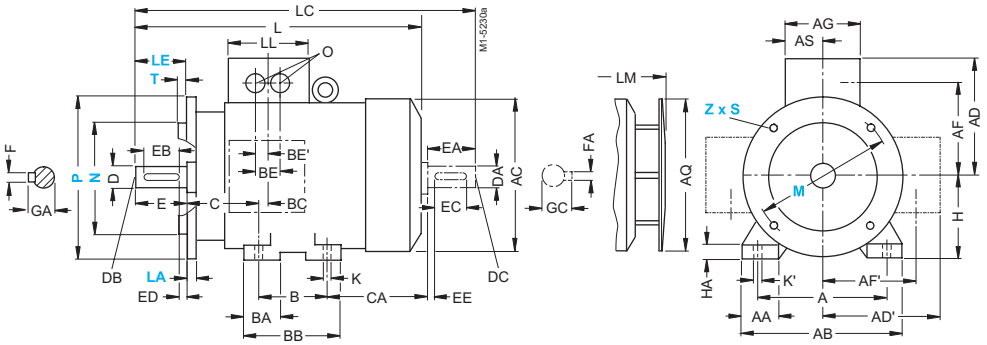

IM B 14 · For flange dimensions, see Page 7/20 (Z = Number of fixing holes)

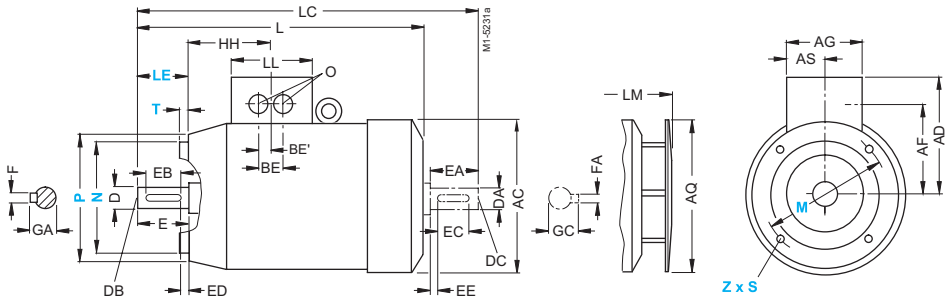

								Drive-end shaft extension							Non-drive-end shaft extension						
HH	K	K'	L	LC	LL	LM	O	D	DB	E	EB	ED	F	GA	DA	DC	EA	EC	EE	FA	GC
104.5	12	16	372	438	121	423.5	2x M32 x 1.5	28	M10	60	50	5	8	31	24	M8	50	40	5	8	27
104.5	12	16	393	461	121	444.5	2x M32 x 1.5	28	M10	60	50	5	8	31	24	M8	50	40	5	8	27
130.5	12	16	453.5	551.5	141	506	2x M32 x 1.5	38	M12	80	70	5	10	41	38	M12	80	70	5	10	41
130.5	12	16	453.5	551.5	141	506	2x M32 x 1.5	38	M12	80	70	5	10	41	38	M12	80	70	5	10	41
160	14.5	18	588	721	166	640.5	2 x M40 x 1.5	42	M16	110	90	10	12	45	42	M16	110	90	10	12	45
160	14.5	18	588	721	166	640.5	2 x M40 x 1.5	42	M16	110	90	10	12	45	42	M 16	110	90	10	12	45

1MA6 · Frame sizes 180 M to 315 L

IM B 3

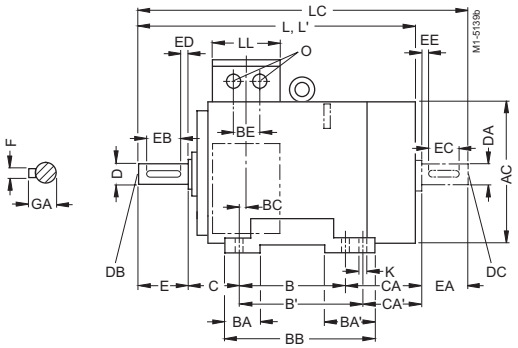

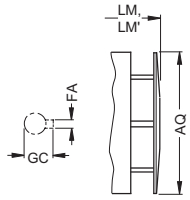

Frame sizes 180 M/L, 225 S/M, 280 S/M and 315 S/M have housing feet each with 2 drilled holes at NDE.

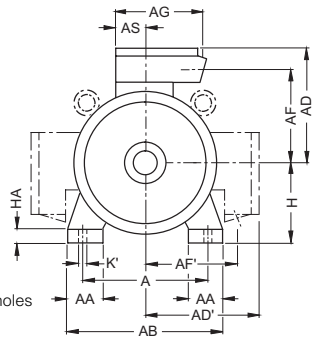

IM B 5 and IM V1 · For flange dimensions, see Page 7/20 (Z = Number of fixing holes)

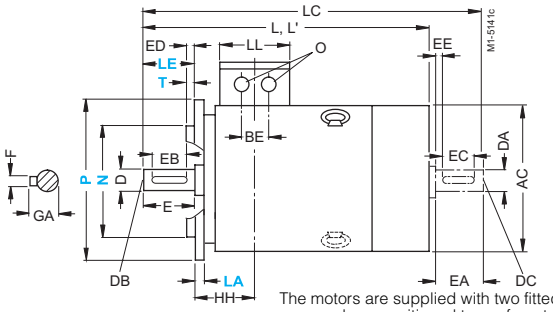

Type of construction IM B 5 / IM V 1 (only up to frame size 315 M)

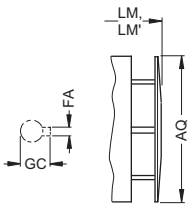

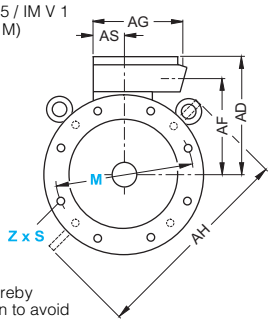

The motors are supplied with two fitted eyebolts conforming to IM B 5, whereby one can be repositioned to conform to IM V 1 or IM V 3. Care must be taken to avoid forces perpendicular to the ring.

7

For motor			Dimension drawing according to **IEC**																					
Size	Type 1MA6 . . .	No. of poles	A	AA	AB	AC[1])	AD	AD'	AF	AF'	AG	AH	AQ	AS	B	B'	BA	BA'	BB	BC	BE	C	CA	CA'
180 M	 183	2 4	279	65	344	375	274	274	227	227	220	470	340	82	241*	279	70	108	319	35	75	121	259	–
180 L	 186	4 to 8	279	65	344	375	274	274	227	227	220	470	340	82	241	279*	70	108	319	35	75	121	–	221
200 L	 206	2 6	318	80	398	402	308	308	248	248	262	530	340	99	305	–	85	85	355	42	85	133	239	–
	 207	2 4 to 8	318	80	398	402	308	308	248	248	262	530	340	99	305	–	85	85	355	42	85	133	239	–
225 S	 220	4 and 8	356	80	436	442	339	339	269	269	264	580	425	100	286*	311	85	110	361	25	85	149	269	–
225 M	 223	2 4 to 8	356	80	436	442	339	339	269	269	264	580	425	100	286	311*	85	110	361	25	85	149	–	244
250 M	 253	2 4 to 8	406	100	506	505	427	427	333	333	338	645	470	120	349	–	100	100	409	39	95	168	283	–
280 S	 280	2 4 to 8	457	100	557	555	452	452	358	358	338	700	525	120	368*	419	100	151	471	30	95	190	317	–
280 M	 283	2 4 to 8	457	100	557	555	452	452	358	358	338	700	525	120	368	419*	100	151	471	30	95	190	–	266
315 S	 310	2 4 to 8	508	120	628	620	515	515	395	395	405	805	590	134	406*	457	125	171	527	32	90	216	358	–
315 M	 313	2 4 to 8	508	120	628	620	515	515	395	395	405	805	590	134	406	457*	125	171	527	32	90	216	–	307
315 L	. . . . 316 . . . . 317 318	2 4 to 8 6 and 8	508	120	628	620	515	515	395	395	405	805	590	134	508	–	120	120	578	32	90	216	396	–

■ Dimensions for 9-terminal box on request.

* This dimension is assigned in DIN EN 50347 to the frame size listed.

1) Measured across the screw heads.

2) For version with low-noise fan.

3) In the low-noise version, a second shaft end and/or top-mounted sensor is not possible.

IM B 35 · For flange dimensions, see Page 7/20 (Z = Number of fixing holes)

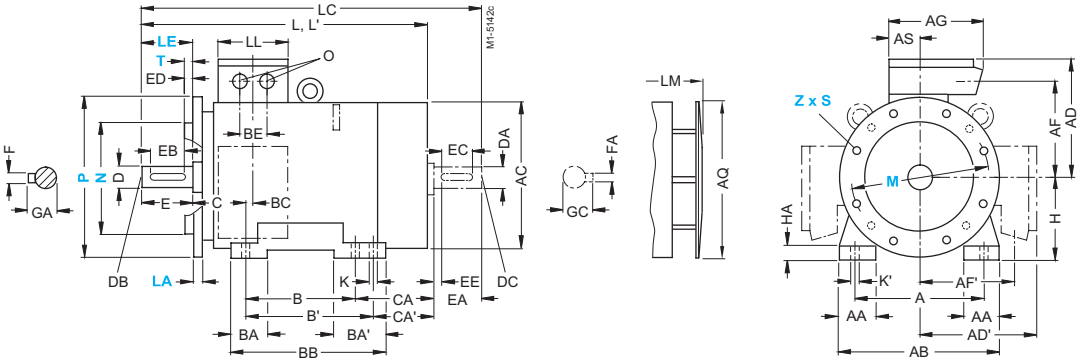

												Drive-end shaft extension							Non-drive-end shaft extension						
H	HA	HH	K	K'	L	L'[2])	LC[3])	LL	LM	LM[2])	O	D	DB	E	EB	ED	F	GA	DA	DC	EA	EC	EE	FA	GC
180	26	156	15	20	715	770 –	841	164	796.5	885 –	2 x M40 x 1.5	48	M 16	110	100	5	14	51.5	48	M 16	110	100	5	14	51.5
180	26	156	15	20	715	–	841	164	796.5	–	2 x M40 x 1.5	48	M 16	110	100	5	14	51.5	48	M 16	110	100	5	14	51.5
200	34	175	19	25		819.5	897	197	853	901	2 x M50 x 1.5	55	M 20	110	100	5	16	59	48	M 16	110	100	5	14	51.5
					771.5	–				–									55	M 20				16	59
200	34	175	19	25	771.5	819.5	897	197	853	901	2 x M50 x 1.5	55	M 20	110	100	5	16	59	48	M 16	110	100	5	14	51.5
						–				–									55	M 20				16	59
225	34	174	19	25	839	–	954	200	935	–	2 x M50 x 1.5	60	M 20	140	125	10	18	64	55	M 20	110	100	10	16	59
225	34	174	19	25	809	855	924	200	909	955	2 x M50 x 1.5	55	M 20	110	100	5	16	59	48	M 16	110	100	5	14	51.5
					839	–	954		935	–		60		140	125	10	18	64	55	M 20		100	10	16	59
250	42	207	24	30	935	1010	1050	234	1035	1110	2 x M63 x 1.5	60	M 20	140	125	10	18	64	55	M 20	110	100	5	16	59
						–	1080			–		65						69	60		140	125		18	64
280	42	220	24	30	1010	1080	1155	234	1120	1230	2 x M63 x 1.5	65	M 20	140	125	10	18	69	60	M 20	140	125	10	18	64
						–				–		75					20	79.5	65						69
280	42	220	24	30	1010	1080	1155	234	1120	1230	2 x M63 x 1.5	65	M 20	140	125	10	18	69	60	M 20	140	125	10	18	64
						–				–		75					20	79.5	65						69
315	52	248	28	35	1114	1185	1260	266	1224	1295	2 x M63 x 1.5	65	M 20	140	125	10	18	69	60	M 20	140	125	10	18	64
					1144	–	1290		1254	–		80		170	140		22	85	70					20	74.5
315	52	248	28	35	1114	1185	1260	266	1224	1295	2 x M63 x 1.5	65	M 20	140	125	10	18	69	60	M 20	140	125	10	18	64
					1144	–	1290		1254	–		80		170	140		22	85	70					20	74.5
315	52	248	28	35	1254	1325	1400	266	1364	1435	2 x M63 x 1.5	65	M 20	140	125	10	18	69	60	M 20	140	125	10	18	64
					1284	–	1430		1394	–		80		170	140		22	85	70					20	74.5
					1284	–	1430		1394	–		80		170	140		22	85	70					20	74.5

1LG4 · Frame sizes 180 M to 315 L

IM B 3

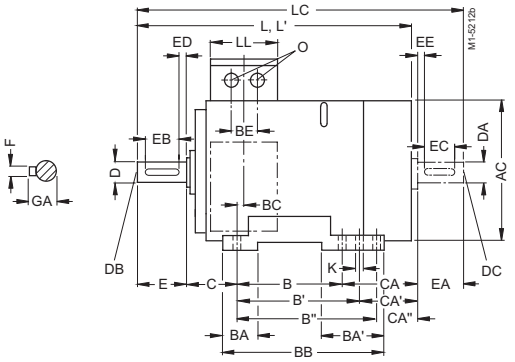

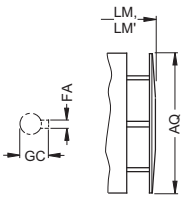

Frame sizes 180 M/L, 225 S/M, 280 S/M and 315 S/M/L have housing feet each with 2 drilled holes at NDE (Exception: 1LG4 318-6 motors have housing feet each with 3 drilled holes at NDE).

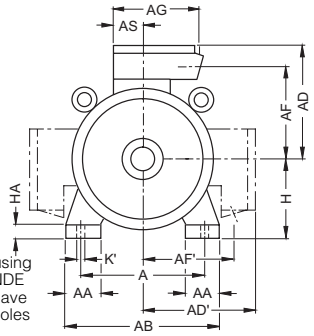

IM B 5 and IM V1 · For flange dimensions, see Page 7/20 (Z = Number of fixing holes)

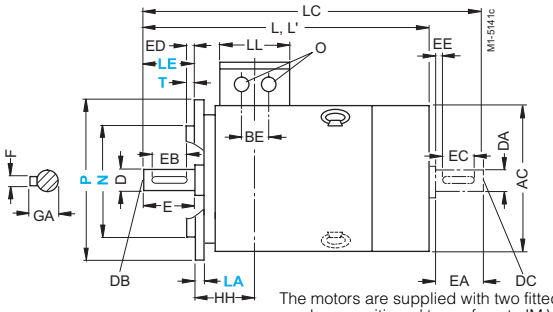

Type of construction IM B 5 / IM V 1 (only up to frame size 315 M)

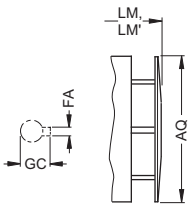

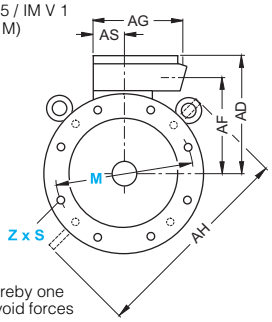

The motors are supplied with two fitted eyebolts conforming to IM B 5, whereby one can be repositioned to conform to IM V 1 or IM V 3. Care must be taken to avoid forces perpendicular to the ring.

For motor			Dimension drawing according to **IEC**																					
Size	Type 1LG4 . . .	No. of poles	A	AA	AB	AC[1])	AD	AD'	AF	AF'	AG	AH	AQ	AS	B	B'	B''	BA	BA'	BB	BC	BE	C	CA	CA'
180 M	 183	2 and 4	279	65	339	363	262	262	218	218	152	452	340	71	241*	279	–	70	111	328	36	54	121	202*	164
180 L	 186	4 to 8	279	65	339	363	262	262	218	218	152	452	340	71	241	279*	–	70	111	328	36	54	121	202	164*
	 188	2 to 8	279	65	339	363	262	262	218	218	152	452	340	71	241	279*	–	70	111	328	36	54	121	253	215*
200 L	 206	2 and 6	318	70	378	402	300	300	247	247	260	486	340	96	305	–	–	80	80	355	63	85	133	177	–
	 207	2 to 8	318	70	378	402	300	300	247	247	260	486	340	96	305	–	–	80	80	355	63	85	133	177	–
	 208	2 and 6 4 and 8	318	70	378	402	300	300	247	247	260	486	340	96	305	–	–	80	80	355	63	85	133	234 177	–
225 S	 220	4 and 8	356	80	436	442	325	325	272	272	260	556	425	96	286*	311	–	85	110	361	47	85	149	218*	193
225 M	 223	2 4 to 8	356	80	436	442	325	325	272	272	260	556	425	96	286	311*	–	85	110	361	47	85	149	218	193*
	 228	2 4 to 8	356	80	436	442	325	325	272	272	260	556	425	96	286	311*	–	85	110	361	47	85	149	278	253*
250 M	 253	2 4 to 8	406	100	490	495	392	392	308	308	300	620	470	117	349	–	–	100	100	409	69	110	168	235	–
	 258	2 4 6 and 8	406	100	490	495	392	392	308	308	300	620	470	117	349	–	–	100	100	409	69	110	168	235 305 235	–
280 S	 280	2 4 to 8	457	100	540	555	432	432	348	348	300	672	525	118	368*	419	–	100	151	479	62	110	190	267*	216
280 M	 283	2 4 to 8	457	100	540	555	432	432	348	348	300	672	525	118	368	419*	–	100	151	479	62	110	190	267	216*
	 288	2 4 6 and 8	457	100	540	555	432	432	348	348	300	672	525	118	368	419*	–	100	151	479	62	110	190	377 267	326* 216*
315 S	 310	2	508	120	610	610	495	495	406	406	379	780	590	154	406*	457	–	125	176	527	69	110	216	315*	264
	 310	4 to 8																							
315 M	 313	2	508	120	610	610	495	495	406	406	379	780	590	154	406	457*	–	125	176	527	69	110	216	315	264*
	 313	4 to 8																							
315 L[4])	. . . . 316/317	2	508	120	610	610	495	495	406	406	379	780	590	154	457	508*	–	125	176	578	69	110	216	424	373*
	. . . . 316/317	4 to 8																							
	 318	8																							
	 318	6	508	120	610	610	495	495	406	406	379	780	590	154	406	457	508*	155	250	666	69	110	216	615	564

* This dimension is assigned in DIN EN 50347 to the frame size listed.

1) Measured across the screw heads.

2) In version with low-noise fan for 2-pole motors.

3) In the low-noise version, a second shaft end and/or top-mounted sensor is not possible.

IM B 35 · For flange dimensions, see Page 7/20 (Z = Number of fixing holes)

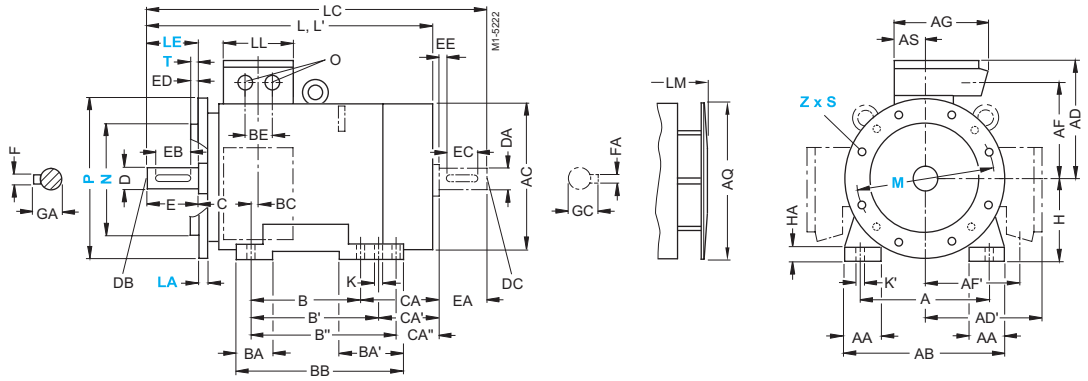

CA''	H	HA	HH	K	K'	L	L[2])	LC[3])	LL	LM	LM[2])	O	Drive-end shaft extension D	DB	E	EB	ED	F	GA	Non-drive-end shaft extension DA	DC	EA	EC	EE	FA	GC
	180	20	157	15	19	668.5	668.5	784	132	758.5	758.5	2 x M40 x 1.5	48	M 16	110	100	5	14	51.5	48	M 16	110	100	5	14	51.5
	180	20	157	15	19	668.5		784	132	758.5		2 x M40 x 1.5	48	M 16	110	100	5	14	51.5	48	M 16	110	100	5	14	51.5
	180	20	157	15	19	719.5	719.5	835	132	809.5	809.5	2 x M40 x 1.5	48	M 16	110	100	5	14	51.5	48	M 16	110	100	5	14	51.5
	200	25	196	19	25	720	754	835	192	810	844	2 x M50 x 1.5	55	M 20	110	100	5	16	59	55	M 20	110	100	5	16	59
	200	25	196	19	25	720	754	835	192	810	844	2 x M50 x 1.5	55	M 20	110	100	5	16	59	55	M 20	110	100	5	16	59
	200	25	196	19	25	777	811	892	192	867	901	2 x M50 x 1.5	55	M 20	110	100	5	16	59	55	M 20	110	100	5	16	59
						720		835		810																
	225	34	196	19	25	789		903	192	889		2 x M50 x 1.5	60	M 20	140	125	10	18	64	55	M 20	110	100	5	16	59
	225	34	196	19	25	759	793	873	192	859	893	2 x M50 x 1.5	55	M 20	110	100	5	16	59	48	M 16	110	100	5	14	51.5
						789		903		889			60	M 20	140	125	10	18	64	55	M 20	110	100	5	16	59
	225	34	196	19	25	819	853	933	192	919	953	2 x M50 x 1.5	55	M 20	110	100	5	16	59	48	M 16	110	100	5	14	51.5
						849		963		949			60	M 20	140	125	10	18	64	55	M 20	110	100	5	16	59
	250	40	237	24	30	887	924	1002	236	987	1024	2 x M63 x 1.5	60	M 20	140	125	10	18	64	55	M 20	110	100	5	16	59
								1032					65	M 20	140	125	10	18	69	60	M 20	140	125	10	18	64
	250	40	237	24	30	887	924	1002	236	987	1024	2 x M63 x 1.5	60	M 20	140	125	10	18	64	55	M 20	110	100	5	16	59
						957		1102		1057			65	M 20	140	125	10	18	69	60	M 20	140	125	10	18	64
						887		1032		987			65	M 20	140	125	10	18	69	60	M 20	140	125	10	18	64
	280	40	252	24	30	960	998	1105	236	1070	1108	2 x M63 x 1.5	65	M 20	140	125	10	18	69	60	M 20	140	125	10	18	64
													75	M 20	140	125	10	20	79.5	65	M 20	140	125	10	18	69
	280	40	252	24	30	960	998	1105	236	1070	1108	2 x M63 x 1.5	65	M 20	140	125	10	18	69	60	M 20	140	125	10	18	64
													75	M 20	140	125	10	20	79.5	65	M 20	140	125	10	18	69
	280	40	252	24	30	1070	1108	1215	236	1180	1218	2 x M63 x 1.5	65	M 20	140	125	10	18	69	60	M 20	140	125	10	18	64
													75	M 20	140	125	10	20	79.5	65	M 20	140	125	10	18	69
						960		1105		1070			75	M 20	140	125	10	20	79.5	65	M 20	140	125	10	18	69
	315	50	285	28	35	1072	1142	1217	307	1182	1252	2 x M63 x 1.5	65	M 20	140	125	10	18	69	60	M 20	140	125	10	18	64
						1102		1247		1212			80	M 20	170	140	10	22	85	70	M 20	140	125	10	20	74.5
	315	50	285	28	35	1072	1142	1217	307	1182	1252	2 x M63 x 1.5	65	M 20	140	125	10	18	69	60	M 20	140	125	10	18	64
						1102		1247		1212			80	M 20	170	140	10	22	85	70	M 20	140	125	10	20	74.5
	315	50	285	28	35	1232	1302	1377	307	1342	1412	2 x M63 x 1.5	65	M 20	140	125	10	18	69	60	M 20	140	125	10	18	64
						1262		1407		1372			80	M 20	170	140	10	22	85	70	M 20	140	125	10	20	74.5
													80	M 20	170	140	10	22	85	70	M 20	140	125	10	20	74.5
513*	315	30	285	28	35	1402		1547	307	1512		2 x M63 x 1.5	80	M 20	170	140	10	22	85	70	M 20	140	125	10	20	74.5

4) For terminal box system order codes (K09, K10, K11), screwed feet with foot dimensions

BB = 666 mm only (see "Technical Information", "Eyebolts").

1LG6 · Frame sizes 180 M to 315 L

IM B 3

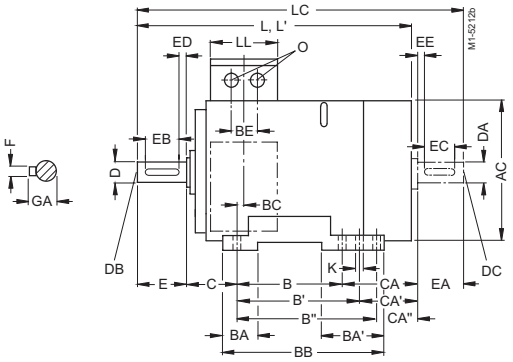

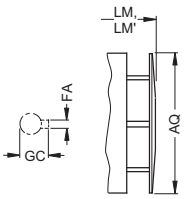

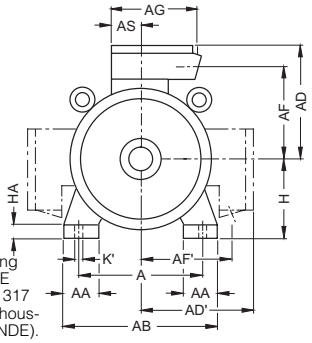

Frame sizes 180 M/L, 225 S/M, 280 S/M and 315 S/M/L have housing feet each with 2 drilled holes at NDE (Exception: 2-, 4- and 6-pole 1LG6 317 motors and 1LG6 318 motors have housing feet each with 3 drilled holes at NDE).

IM B 5 and IM V1 · For flange dimensions, see Page 7/20 (Z = Number of fixing holes)

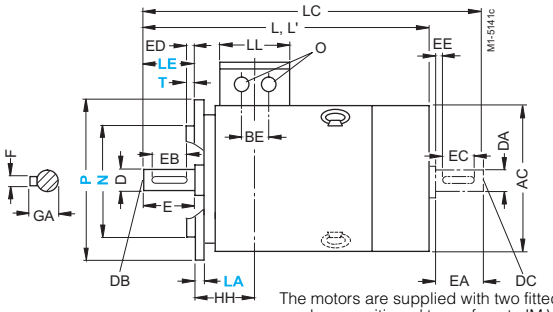

Type of construction IM B 5 / IM V 1 (only up to frame size 315 M)

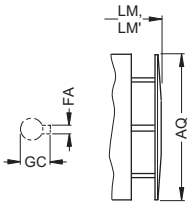

Frame size IM V 1

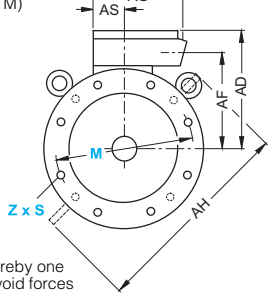

The motors are supplied with two fitted eyebolts conforming to IM B 5, whereby one can be repositioned to conform to IM V 1 or IM V 3. Care must be taken to avoid forces perpendicular to the ring.

For motor			Dimension drawing according to **IEC**																					
Size	Type 1LG6 . . .	No. of poles	A	AA	AB	AC[1])	AD	AD'	AF	AF'	AG	AH	AQ	AS	B	B'	B''	BA	BA'	BB	BC	BE	C	CA	CA'
180 M	 183	2	279	65	339	363	262	262	218	218	152	452	340	71	241*	279	–	70	111	328	36	54	121	253*	215
		4																						202*	164
180 L	 186	4 to 8	279	65	339	363	262	262	218	218	152	452	340	71	241	279*	–	70	111	328	36	54	121	253	215*
200 L	 206	2 and 6	318	70	378	415	300	300	247	247	260	486	340	96	305	–	–	80	80	355	63	85	133	177	–
	 207	2 and 6	318	70	378	415	300	300	247	247	260	486	340	96	305	–	–	80	80	355	63	85	133	234	–
		4 and 8																						177	
225 S	 220	4 and 8	356	80	436	442	325	325	272	272	260	556	425	96	286*	311	–	85	110	361	47	85	149	218*	193
225 M	 223	2	356	80	436	442	325	325	272	272	260	556	425	96	286	311*	–	85	110	361	47	85	149	278	253*
		4 to 8																							
	 228	2	356	80	436	442	325	325	272	272	260	556	425	96	286	311*	–	85	110	361	47	85	149	328	303*
		4 to 6																							
250 M	 253	2	406	100	490	495	392	392	308	308	300	620	470	118	349	–	–	100	100	409	69	110	168	235	–
		4																						305	
		6 and 8																						235	
	 258	2	406	100	490	495	392	392	308	308	300	620	470	118	349	–	–	100	100	409	69	110	168	305	–
		4 to 6																							
280 S	 280	2	457	100	540	555	432	432	348	348	300	672	525	118	368*	419	–	100	151	479	62	110	190	267*	216
		4 to 8																							
280 M	 283	2	457	100	540	555	432	432	348	348	300	672	525	118	368	419*	–	100	151	479	62	110	190	377	326*
		4																							
		6 and 8																						267	216*
	 288	2	457	100	540	555	432	432	348	348	300	672	525	118	368	419*	–	100	151	479	62	110	190	377	226*
		4 to 6																							
315 S	 310	2	508	120	610	610	495	495	406	406	379	780	590	154	406*	457	–	125	176	527	69	110	216	315*	264
	 310	4 to 8																							
315 M	 313	8	508	120	610	610	495	495	406	406	379	780	590	154	406	457*	–	125	176	527	69	110	216	315	264*
	 313	2	508	120	610	610	495	495	406	406	379	780	590	154	457*	508	–	125	176	578	69	110	216	424*	373
	 313	4 and 6																							
315 L[4])	 316	2	508	120	610	610	495	495	406	406	379	780	590	154	457	508*	–	125	176	578	69	110	216	424	373*
	 316	4 and 6																							
	. . . . 316/317	8																							
	. . . . 317/318	2	508	120	610	610	495	495	406	406	379	780	590	154	406	457	508*	155	250	666	69	110	216	615	564
	. . . . 317/318	4 and 6																							
	 318	8																							

* This dimension is assigned in DIN EN 50347 to the frame size listed.

1) Measured across the screw heads.

2) For version with low-noise fan.

3) In the low-noise version, a second shaft end and/or top-mounted sensor is not possible.

IM B 35 · For flange dimensions, see Page 7/20 (Z = Number of fixing holes)

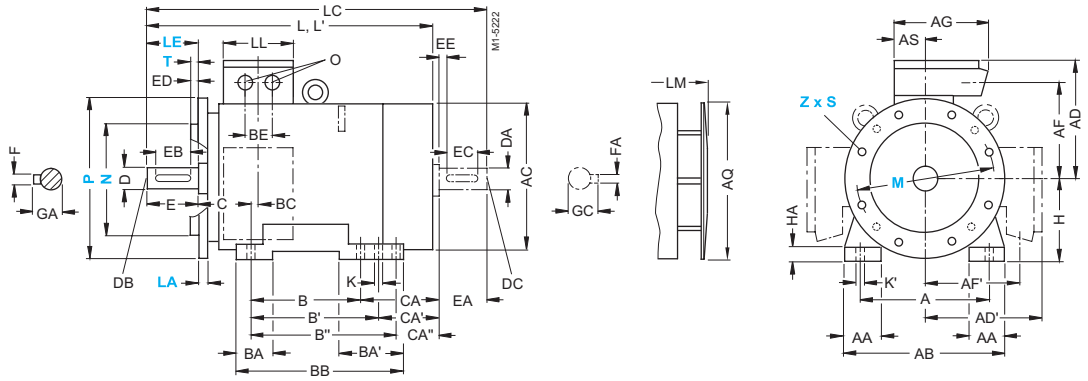

CA''	H	HA	HH	K	K'	L	L[2])	LC[3])	LL	LM	LM[2])	O	Drive-end shaft extension D	DB	E	EB	ED	F	GA	Non-drive-end shaft extension DA	DC	EA	EC	EE	FA	GC
	180	20	157	15	19	719.5		835	132	809.5		2 x M40 x 1.5	48	M 16	110	100	5	14	51.5	48	M 16	110	100	5	14	51.5
						668.5		784		758.5																
	180	20	157	15	19	719.5		835	132	809.5		2 x M40 x 1.5	48	M 16	110	100	5	14	51.5	48	M 16	110	100	5	14	51.5
	200	25	196	19	25	756		835	192	846		2 x M50 x 1.5	55	M 20	110	100	5	16	59	55	M 20	110	100	5	16	59
	200	25	196	19	25	813		892	192	903		2 x M50 x 1.5	55	M 20	110	100	5	16	59	55	M 20	110	100	5	16	59
						756		835		846																
	225	34	196	19	25	789		903	192	889		2 x M50 x 1.5	60	M 20	140	125	10	18	64	55	M 20	110	100	5	16	59
	225	34	196	19	25	819		933	192	919		2 x M50 x 1.5	55	M 20	110	100	5	16	59	48	M 16	110	100	5	14	51.5
						849		963		949			60	M 20	140	125	10	18	64	55	M 20	110	100	5	16	59
	225	34	196	19	25	869		983	192	969		2 x M50 x 1.5	55	M 20	110	100	5	16	59	48	M 16	110	100	5	14	51.5
						900		1013		1000			60	M 20	140	125	10	18	64	55	M 20	110	100	5	16	59
	250	40	237	24	30	887		1002	236	987		2 x M63 x 1.5	60	M 20	140	125	10	18	64	55	M 20	110	100	5	16	59
						957		1102		1057			65	M 20	140	125	10	18	69	60	M 20	140	125	10	18	64
						887		1032		987			65	M 20	140	125	10	18	69	60	M 20	140	125	10	18	64
	250	40	237	24	30	957		1102	236	1057		2 x M63 x 1.5	60	M 20	140	125	10	18	64	55	M 20	110	100	5	16	59
													65	M 20	140	125	10	18	69	60	M 20	140	125	10	18	64
	280	40	252	24	30	960		1105	236	1070		2 x M63 x 1.5	65	M 20	140	125	10	18	69	60	M 20	140	125	10	18	64
													75	M 20	140	125	10	20	79.5	65	M 20	140	125	10	18	69
	280	40	252	24	30	1070		1215	236	1180		2 x M63 x 1.5	65	M 20	140	125	10	18	69	60	M 20	140	125	10	18	64
													75	M 20	140	125	10	20	79.5	65	M 20	140	125	10	18	69
						960		1105		1070			75	M 20	140	125	10	20	79.5	65	M 20	140	125	10	18	69
	280	40	252	24	30	1070		1215	236	1180		2 x M63 x 1.5	65	M 20	140	125	10	18	69	60	M 20	140	125	10	18	64
													75	M 20	140	125	10	20	79.5	65	M 20	140	125	10	18	69
	315	50	285	28	35	1072		1217	307	1182		2 x M63 x 1.5	65	M 20	140	125	10	18	69	60	M 20	140	125	10	18	64
						1102		1247		1212			80	M 20	170	140	10	22	85	70	M 20	140	125	10	20	74.5
	315	50	285	28	35	1102		1247	307	1212		2 x M63 x 1.5	80	M 20	170	140	10	22	85	70	M 20	140	125	10	20	74.5
	315	50	285	28	35	1232		1377	307	1342		2 x M63 x 1.5	65	M 20	140	125	10	18	69	60	M 20	140	125	10	18	64
						1262		1407		1372			80	M 20	170	140	10	22	85	70	M 20	140	125	10	20	74.5
	315	50	285	28	35	1232		1377	307	1342		2 x M63 x 1.5	65	M 20	140	125	10	18	69	60	M 20	140	125	10	18	64
						1262		1407		1372			80	M 20	170	140	10	22	85	70	M 20	140	125	10	20	74.5
													80	M 20	170	140	10	22	85	70	M 20	140	125	10	20	74.5
513*	315	30	285	28	35	1372		1517	307	1482		2 x M63 x 1.5	65	M 20	140	125	10	18	69	60	M 20	140	125	10	18	64
						1402		1547		1512			80	M 20	170	140	10	22	85	70	M 20	140	125	10	20	74.5
													80	M 20	170	140	10	22	85	70	M 20	140	125	10	20	74.5

4) For terminal box system order codes (K09, K10, K11), screwed feet with foot dimensions

BB = 666 mm only (see "Technical Information", "Eyebolts").

1LA8 · Frame sizes 315 to 450

IM B 3

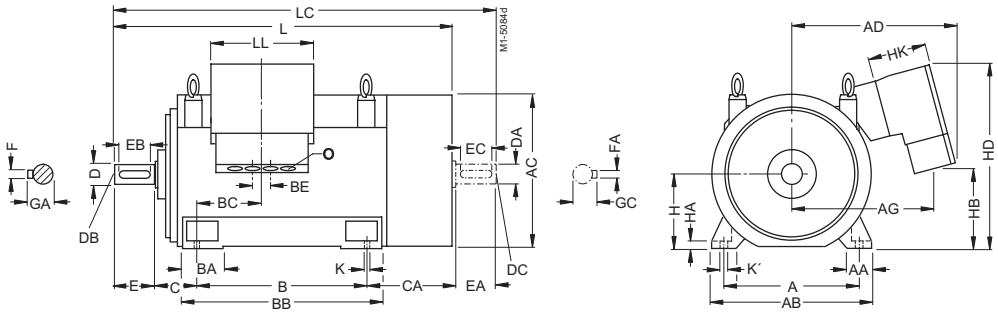

IM V1 · For flange dimensions, see Page 7/20 (Z = Number of fixing holes)

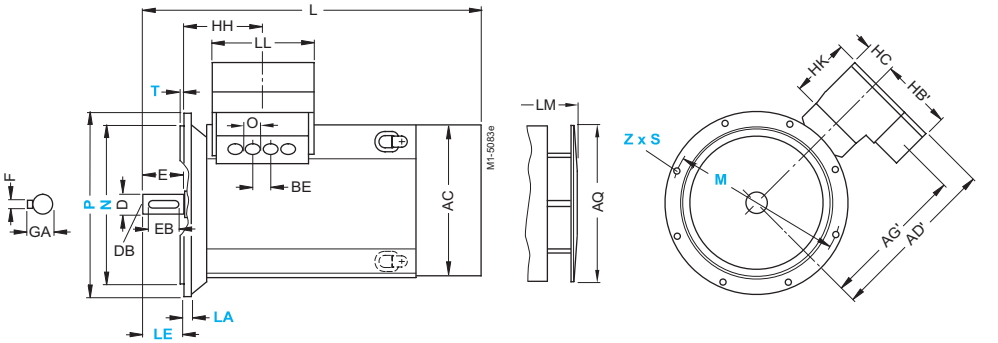

For motor Size	Type 1LA8 . . .	No. of poles	Dimension drawing according to **IEC** A	AA	AB	AC[1])	AD	AD'	AG	AG'	AQ	B	BA	BB	BC	BE	C	CA	H	HA
315	. . . . 315 . . . . 317 . . . . 31 .	2 4 to 8 4 to 8[2])	560	120	680	710	570	582	473	481	670	630	180	780	195	110	180 180 200	435	315	28
355	. . . . 353 . . . . 355 . . . . 35 .	2 4 to 8 4 to 8[2])	630	150	780	790	710	730	585	600	750	800	220	980	185	135	200 200 224	470	355	35
400	. . . . 403 . . . . 405 407	2 4 to 8	710	150	860	880	865	930	775	795	850	900	220	1080	186	100	224	506	400	35
450	. . . . 453 . . . . 455 457	2[3]) 4 to 8	800	180	980	970	900	980	810	845	950	1000	260	1220	170	100	250	540	450	42

Terminal box position

Basic version

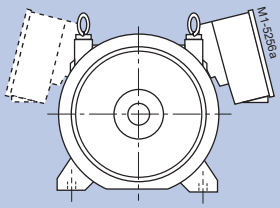

Cable entry: downwards
Console: 0 degrees
Order code: –

Special designs

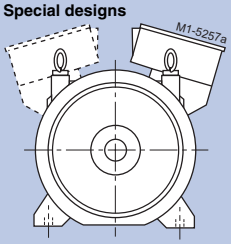

Cable entry: upwards
Console: 180 degrees
Order code: K85

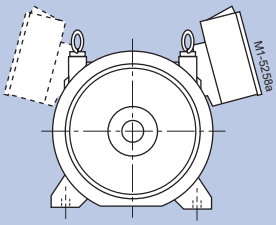

Cable entry: upwards
Console: 0 degrees
Order code: plain text

1) Measured across the screw heads (not in the flattened area of the fan cowl).

2) With bearing for increased cantilever forces.

3) Only for 50 Hz.

IM B 35 · For flange dimensions, see Page 7/20 (Z = Number of fixing holes)

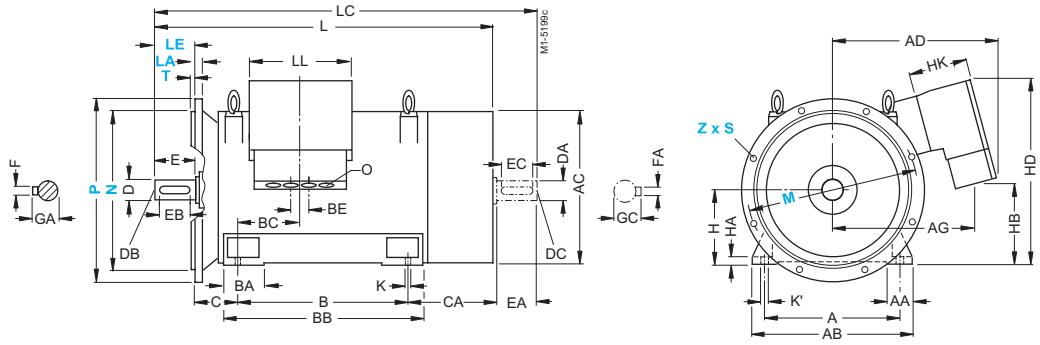

HB	HB'	HD	HK	K	K'	L	LC	LL	LM	O	Drive-end shaft extension D	DB	E	EB	F	GA	Non-drive-end shaft extension DA	DC	EA	EC	FA	GC
360	290	825	170	26	33	1370	1495	307	1500	M 63 x 1.5	65	M 20	140	125	18	69	50	M 16	110	100	14	53.5
						1400	1555		1530		85	M 20	170	140	22	90	70	M 20	140	125	20	74.5
						1420	1575				95	M 24	170	140	25	100	70	M 20	140	125	20	74.5
400	285	905	229	33	40	1595	1750	330	1735	M 72 x 2	75	20 S	140	125	20	79.5	60	M 20	140	125	18	64
						1625	1810		1765		95	24 M	170	140	25	100	80		170	140	22	85
						1690	1874				100	24 M	210	180	28	106	80	M 20	170	140	22	85
440	400	1020	320	33	40	1785	1940	550	1935	Ø 80	80	M 20	170	140	22	85	70	M 20	140	125	20	74.5
						1825	2010		1975		110	M 24	210	180	28	116	90	M 24	170	140	25	95
525	400	1110	320	39	47	1945	2100	550	2105	Ø 80	90	M 24	170	140	25	95	75	M 20	140	125	20	79.5
						1985	2210		2145		120		210	180	32	127	100	M 24	210	180	28	106

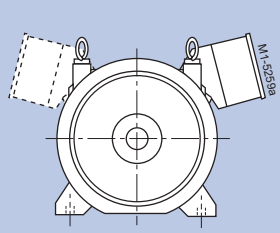

Cable entry: DE / NDE
Console: 0 degrees
Order code: K83/K84

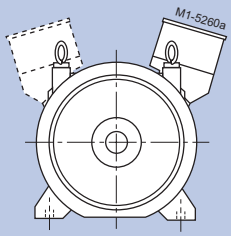

Cable entry: DE / NDE
Console: 180 degrees
Order code: plain text

1MJ6 · Frame sizes 71 M to 160 L

IM B 3

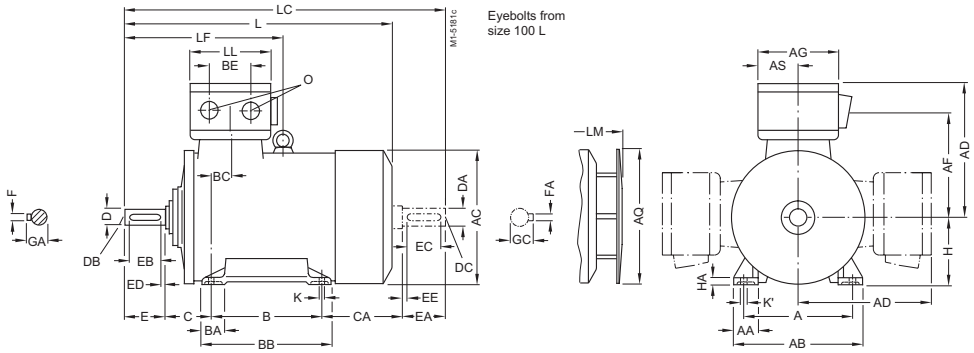

IM B5 and IM V1 · For flange dimensions, see Page 7/20 (Z = Number of fixing holes)

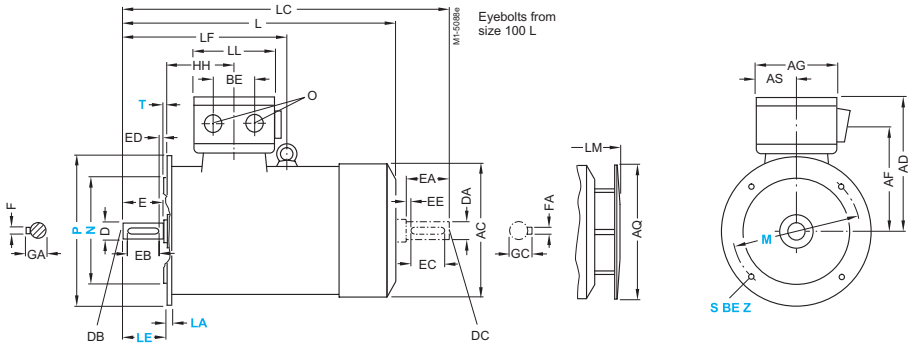

For motor			Dimension drawing according to **IEC**																				
Size	Type 1MJ6 . . .	No. of poles	A	AA	AB	AC[1])	AD	AF	AG	AQ	AS	B	BA	BB	BC	BE	C	CA	H	HA	HH	K	K'	L
71 M	 070	2 and 4	112	34	140	148.5	201[2])	162	152	124	71	90	30	110	58	54	45	144	71	8	103	7	10	299
	 073	2 to 6																						
80 M	 080	2 to 6	125	36	160	165.5	209[2])	170	152	125	71	100	35	125	44	54	50	156	80	10	93.5	9.5	13.5	336
	 083	2 to 6																						
90 L	 096	2 to 8	140	37	168	183	218	177	162	170	81	125	35	156	54	54	56	177	90	13	109.5	10	14	383
	 097	2 to 8																						
100 L	 106	2 to 8	160	45	196	202.5	223	182	162	170	81	140	45	176	50	54	63	185	100	14	112.5	12	16	426
	 107	4 and 8																						
112 M	 113	2 to 8	190	50	226	228.5	238	197	162	170	81	140	45	176	52	54	70	180	112	15	121.5	12	16	428
132 S	 130	2 to 8	216	53	256	267.5	258	217	162	250	81	140	49	180	55	54	89	228	132	17	144	12	16	515
	 131	2																						
132 M	 133	4 to 8	216	53	256	267.5	258	217	162	250	81	178	49	218	55	54	89	190	132	17	144	12	16	515
	 134	6																						
160 M	 163	2 to 8	254	60	300	323	280	239	162	250	81	210	57	256	40	54	108	238	160	20	148	15	19	641
	 164	2 and 8																						
160 L	 166	2 to 8	254	60	300	323	314	246	216	250	95	254	57	300	40	96	108	194	160	20	148	15	19	641

1) Measured across the screw heads.

2) K09 and K10 from frame size 90 upwards.

IM B 35 · For flange dimensions, see Page 7/20 (Z = Number of fixing holes)

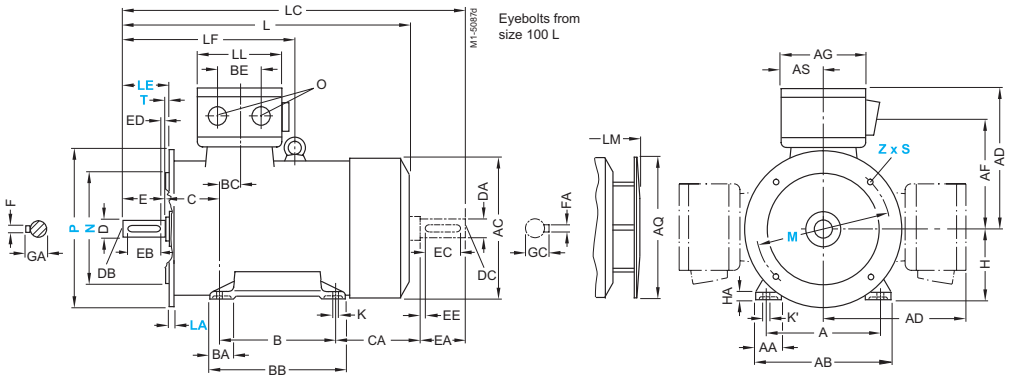

IM B 14 – For 1MJ6 frame sizes 71 M to 90 L · For flange dimensions, see Page 7/20 (Z = Number of fixing holes)

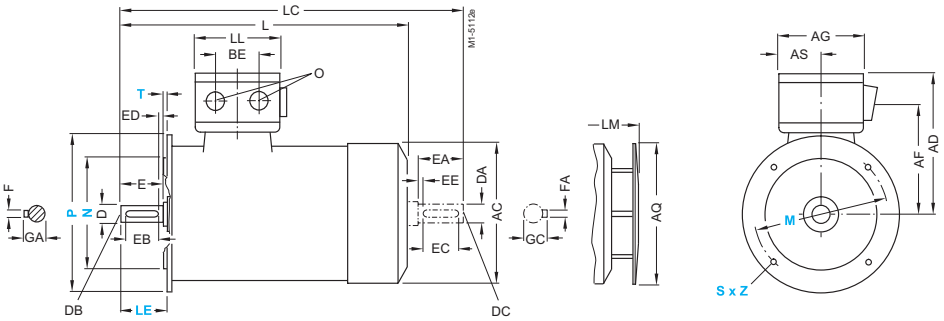

LC	LF	LL	LM	O	Drive-end shaft extension D	DB	E	EB	ED	F	GA	Non-drive-end shaft extension DA	DC	EA	EC	EE	FA	GC
339	–	132	327	2 x M25 x 1.5	14	M 5	30	22	4	5	16	14	M 5	30	22	4	5	16
386	–	132	362	2 x M25 x 1.5	19	M 6	40	32	4	6	21.5	19	M 6	40	32	4	6	21.5
458	–	162	434.5	2 x M25 x 1.5	24	M 8	50	40	5	8	27	24	M 8	50	40	5	8	27
508	–	162	477.5	2x M32 x 1.5	28	M 10	60	50	5	8	31	28	M 10	60	50	5	8	31
510	–	162	479.5	2x M32 x 1.5	28	M 10	60	50	5	8	31	28	M 10	60	50	5	8	31
617	–	162	567.5	2x M32 x 1.5	38	M 12	80	70	5	10	41	38	M 12	80	70	5	10	41
617	–	162	567.5	2x M32 x 1.5	38	M 12	80	70	5	10	41	38	M 12	80	70	5	10	41
776	383	162	693.5	2 x M40 x 1.5	42	M 16	110	90	10	12	45	42	M 16	110	90	10	12	45
776	383	190	693.5	2 x M40 x 1.5	42	M 16	110	90	10	12	45	42	M 16	110	90	10	12	45

Dimensions

1MJ6, 1MJ7 · Frame sizes 180 M to 315 M, 1MJ8 · Frame sizes 315 M to 355

IM B 3

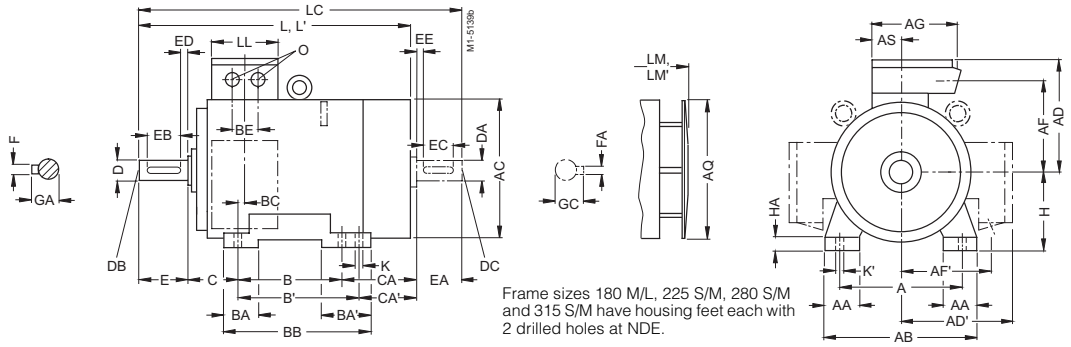

Frame sizes 180 M/L, 225 S/M, 280 S/M and 315 S/M have housing feet each with 2 drilled holes at NDE.

IM B 5 and IM V1 · For flange dimensions, see Page 7/20 (Z = Number of fixing holes)

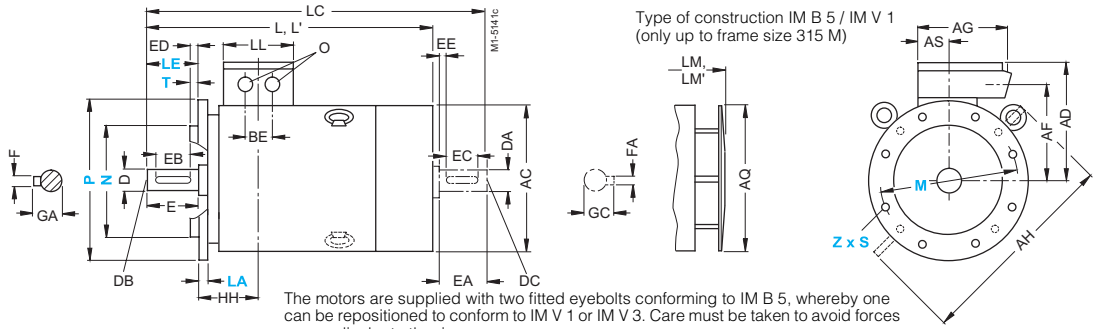

Type of construction IM B 5 / IM V 1 (only up to frame size 315 M)

The motors are supplied with two fitted eyebolts conforming to IM B 5, whereby one can be repositioned to conform to IM V 1 or IM V 3. Care must be taken to avoid forces perpendicular to the ring.

7

For motor			Dimension drawing according to **IEC**																						
Size	Type	No. of poles	A	AA	AB	AC[1])	AD	AD'	AE	AE'	AE''	AF	AF'	AG	AH	AQ	AS	B	B'	BA	BA'	BB	BC	BE	C	CA
180 M	1MJ6 183	2 and 4	279	65	344	375	306	306	–	–	–	259	259	220	470	340	82	241*	279	70	108	319	35	75	121	259
180 L	1MJ6 186	4 to 8	279	65	344	375	306	306	–	–	–	259	259	220	470	340	82	241	279*	70	108	319	35	75	121	–
200 L	1MJ6 206	2 6	318	80	398	415	349	349	–	–	–	289	289	262	530	340	98.5	305	–	85	85	355	42	85	133	239
	1MJ6 207	2 4 to 8	318	80	398	415	349	349	–	–	–	289	289	262	530	340	98.5	305	–	85	85	355	42	85	133	239
225 S	1MJ7 220 –	4 and 8	356	80	436	442	377	377	–	–	–	315	315	262	580	425	100	286*	311	85	110	361	25	90	149	269
225 M	1MJ7 223 –	2 4 to 8	356	80	436	442	377	377	–	–	–	315	315	262	580	425	100	286	311*	85	110	361	25	90	149	–
250 M	1MJ7 253 –	2 4 to 8	406	100	506	505	466	466	–	–	–	353	353	336	645	470	120	349	–	100	100	409	39	95	168	283
280 S	1MJ7 280 –	2 4 to 8	457	100	557	555	491	491	–	–	–	395	395	336	700	525	120	368*	419	100	151	479	30	95	190	317
280 M	1MJ7 283 –	2 4 to 8	457	100	557	555	491	491	–	–	–	395	395	336	700	525	120	368	419*	100	151	479	30	95	190	–
315 S	1MJ7 310 –	2 4 to 8	508	120	628	620	558	558	–	–	–	448	448	410	805	590	135	406*	457	125	171	527	32	90	216	358
315 M	1MJ7 313 –	2 4 to 8	508	120	628	620	558	558	–	–	–	448	448	410	805	590	135	406	457*	125	171	527	32	90	216	–
315 M	1MJ8 313	2 4 to 8	508	120	630	622	610	–	–	–	–	–	–	494	–	–	–	457	–	130	130	570	252	–	216	–
	1MJ8 314	4 and 6	508	120	630	622	610	–	–	–	–	–	–	494	–	–	–	457	–	130	130	570	252	–	216	–
315 L	1MJ8 316	2 4 to 8	508	120	630	622	663	–	–	–	–	–	–	494	–	–	–	508	–	130	130	621	297	–	216	–
355 M	1MJ8 353	2 4 to 8	610	120	700	698	706	–	520	740	710	565	–	475	–	–	–	560	–	150	150	650	385	–	254	–
	1MJ8 354	4	610	120	700	698	706	–	520	740	710	565	–	475	–	–	–	560	–	150	150	650	385	–	254	–
355 L	1MJ8 356	2 4 to 8	610	120	700	698	706	–	520	740	710	565	–	475	–	–	–	630	–	150	150	720	385	–	254	–
	1MJ8 357	4	610	120	700	698	706	–	520	740	710	565	–	475	–	–	–	630	–	150	150	720	385	–	254	–

* This dimension is assigned in DIN EN 50347 to the frame size listed.

1) Measured across the screw heads.

2) For version with low-noise fan.

3) In the low-noise version, a second shaft end is not possible.

1MJ6, 1MJ7 · Frame sizes 180 M to 315 M, 1MJ8 · Frame sizes 315 M to 355

IM B 35 · For flange dimensions, see Page 7/20 (Z = Number of fixing holes)

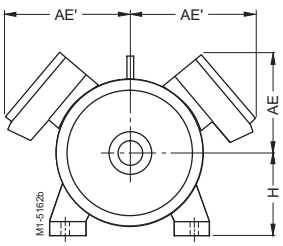

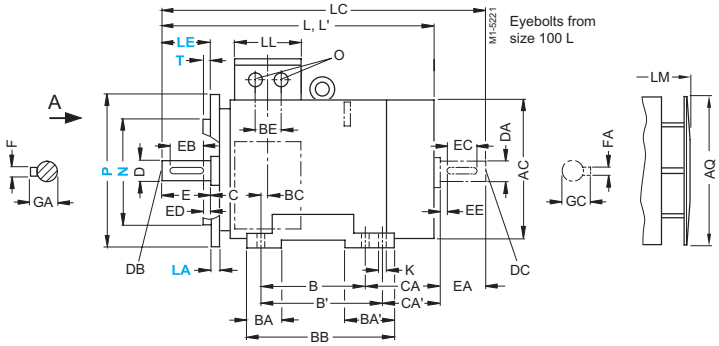

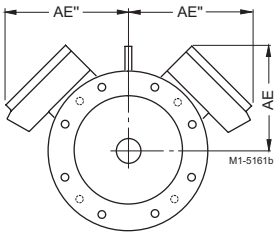

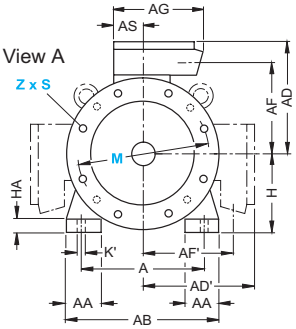

Frame sizes 180 M/L, 225 S/M, 280 S/M and 315 S/M have housing feet each with 2 drilled holes at NDE.

													Drive-end shaft extension							Non-drive-end shaft extension						
CA'	H	HH	HA	K	K'	L	L'[2])	LC[3])	LL	LM	LM'[2])	O	D	DB	E	EB	ED	F	GA	DA	DC	EA	EC	EE	FA	GC
–	180	156	26	15	20	715	770	841	164	796.5	885	2 x M 40 x 1.5	48	M 16	110	100	5	14	51.5	48	M 16	110	100	5	14	51.5
221	180	156	26	15	20	715	–	841	164	796.5	–	2 x M 40 x 1.5	48	M 16	110	100	5	14	51.5	48	M 16	110	100	5	14	51.5
–	200	175	34	19	25	771.5	825	897	197	853	910	2 x M 50 x 1.5	55	M 20	110	100	5	16	59	48	M 16	110	100	5	14	51.5
							–				–									55	M 20				16	59
–	200	175	34	19	25	771.5	825	897	197	853	910	2 x M 50 x 1.5	55	M 20	110	100	5	16	59	48	M 16	110	100	5	14	51.5
							–				–									55	M 20				16	59
–	225	174	34	19	25	839	–	954	197	939	–	2 x M 50 x 1.5	60	M 20	140	125	10	18	64	55	M 20	110	100	5	16	59
244	225	174	34	19	25	809	855	924	197	909	955	2 x M 50 x 1.5	55	M 20	110	100	5	16	59	48	M 16	110	100	5	14	51.5
						839	–	954		939	–		60		140	125	10	18	64	55	M 20				16	59
–	250	207	42	24	30	930	1010	1050	234	1035	1110	2 x M 63 x 1.5	60	M 20	140	125	10	18	64	55	M 20	110	100	5	16	59
							–	1080			–		65						69	60		140	125	10	18	64
–	280	220	42	24	30	1010	1080	1155	234	1120	1230	2 x M 63 x 1.5	65	M 20	140	125	10	18	69	60	M 20	140	125	10	18	64
							–				–		75					20	79.5	65						69
266	280	220	42	24	30	1010	1080	1155	234	1120	1230	2 x M 63 x 1.5	65	M 20	140	125	10	18	69	60	M 20	140	125	10	18	64
							–				–		75					20	79.5	65						69
–	315	248	56	28	35	1114	1185	1260	266	1224	1295	2 x M 63 x 1.5	65	M 20	140	125	10	18	69	60	M 20	140	125	10	18	64
						1140	–	1290		1250	–		80		170	140		22	85	70					20	74.5
307	315	248	56	28	35	1114	1185	1260	266	1224	1295	2 x M 63 x 1.5	65	M 20	140	125	10	18	69	60	M 20	140	125	10	18	64
						1140	–	1290		1250	–		80		170	140		22	85	70					20	74.5
–	315	468	30	28	28	1241	–	1440	–	1404	–	2 x M 63 x 1.5	65	M 20	140	125		18	69	65	M 20	140	125		18	69
						1343		1563		1455			80	M 20	170	140		22	85	80	M 20	170	140		22	85
–	315	468	30	28	28	1343	–	1563	–	1455	–	2 x M 63 x 1.5	80	M 20	170	140		22	85	80	M 20	170	140		22	85
–	315	513	30	28	28	1351	–	1550	–	1514	–	2 x M 63 x 1.5	65	M 20	140	125		18	69	65	M 20	140	125		18	69
						1453		1673		1565			80	M 20	170	140		22	85	80	M 20	170	140		22	85
–	355	–	30	28	28	1650	1590	–	–	1750	–	35 – 75	75	M 20	140	125		20	79.5	75	M 20	140	125		20	79.5
						1680	1640			1800			90	M 24	170	140		25	95	90	M 24	170	140		25	95
–	355	–	30	28	28	1680	1640	–	–	1800	–	35 – 75	90	M 24	170	140		25	95	90	M 24	170	140		25	95
–	355	–	30	28	28	1780	1725	–	–	1884	–	35 – 75	75	M 20	140	125		20	79.5	75	M 20	140	125		20	79.5
						1810	1775			1934			90	M 24	170	140		25	95	90	M 24	170	140		25	95
–	355	–	30	28	28	1810	1775	–	–	1934	–	35 – 75	90	M 24	170	140		25	95	90	M 24	170	140		25	95

Flange dimensions

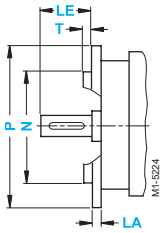

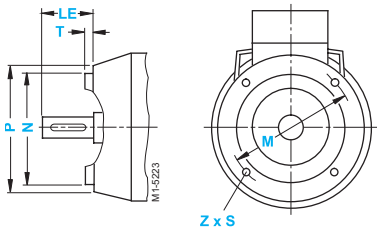

In DIN EN 50347, flange FF with clearance holes and flange FT with tapped holes are assigned to the frame sizes.
The DIN 42948 standard with flanges A and C remains valid. See the assignment table below.
(Z = Number of fixing holes)

Size	Type of construction, flange type	Flange with clearance holes (**FF**/A) tapped holes (**FT**/C) acc. to DIN EN 50 347	acc. to DIN 42 948	Dimension drawing according to **IEC** LA	LE	M	N	P	S	T	Z
1LA5, 1LA6, 1LA7, 1LA9, 1LG4, 1LG6, 1MA6, 1MA7, 1MJ6, and 1MJ7 motors											
56	IM B5 flange	**FF 100**	A120	8	20	100	80	120	7	3	4
	IM B14 standard flange	**FT 65**	C 80	–	20	65	50	80	M 5	2.5	4
	IM B14 special flange	**FT 85**	C 105	–	20	85	70	105	M 6	2.5	4
63	IM B5 flange	**FF 115**	A140	8	23	115	95	140	10	3	4
	IM B14 standard flange	**FT 75**	C 90	–	23	75	60	90	M 5	2.5	4
	IM B14 special flange	**FT 100**	C 120	–	23	100	80	120	M 6	3	4
71	IM B5 flange	**FF 130**	A160	9	30	130	110	160	10	3.5	4
	IM B14 standard flange	**FT 85**	C 105	–	30	85	70	105	M 6	2.5	4
	IM B14 special flange	**FT 115**	C 140	–	30	115	95	140	M 8	3	4
80	IM B5 flange	**FF 165**	A200	10	40	165	130	200	12	3.5	4
	IM B14 standard flange	**FT 100**	C 120	–	40	100	80	120	M 6	3	4
	IM B14 special flange	**FT 130**	C 160	–	40	130	110	160	M 8	3.5	4
90	IM B5 flange	**FF 165**	A200	10	50	165	130	200	12	3.5	4
	IM B14 standard flange	**FT 115**	C 140	–	50	115	95	140	M 8	3	4
	IM B14 special flange	**FT 130**	C 160	–	50	130	110	160	M 8	3.5	4
100	IM B5 flange	**FF 215**	A250	11	60	215	180	250	14.5	4	4
	IM B14 standard flange	**FT 130**	C 160	–	60	130	110	160	M 8	3.5	4
	IM B14 special flange	**FT 165**	C 200	–	60	165	130	200	M 10	3.5	4
112	IM B5 flange	**FF 215**	A250	11	60	215	180	250	14.5	4	4
	IM B14 standard flange	**FT 130**	C 160	–	60	130	110	160	M 8	3.5	4
	IM B14 special flange	**FT 165**	C 200	–	60	165	130	200	M 10	3.5	4
132	IM B5 flange	**FF 265**	A300	12	80	265	230	300	14.5	4	4
	IM B14 standard flange	**FT 165**	C 200	–	80	165	130	200	M 10	3.5	4
	IM B14 special flange	**FT 215**	C 250	–	80	215	180	250	M 12	4	4
160	IM B5 flange	**FF 300**	A350	13	110	300	250	350	18.5	5	4
	IM B14 standard flange	**FT 215**	C 250	–	110	215	180	250	M 12	4	4
	IM B14 special flange	**FT 250**	C 300	–	110	265	230	300	M 12	4	4
180	IM B5 flange	**FF 300**	A350	13	110	300	250	350	18.5	5	4
200	IM B5 flange	**FF 350**	A400	15	110	350	300	400	18.5	5	4
225 2-pole 4-pole to 8-pole	IM B5 flange	**FF 400**	A450	16	110 140	400	350	450	18.5	5	8
250	IM B5 flange	**FF 500**	A550	18	140	500	450	550	22	6	8
280	IM B5 flange	**FF 500**	A550	18	140	500	450	550	22	6	8
315 2-pole 4-pole to 8-pole	IM B5 flange	**FF 600**	A660	22	140 170	600	550	660	22	6	8
1LA8, 1MJ8 motors											
315 2-pole 4-pole to 8-pole	IM B5 flange	–	–	25 (22)	140 170	740 (600)	680 (550)	800 (660)	22 (24)	6	8
355 2-pole 4-pole to 8-pole	IM B5 flange	–	–	25	140 170	840 (740)	780 (680)	900 (800)	22 (24)	6	8
400 2-pole 4-pole to 8-pole	IM B5 flange	–	–	28	170 210	940	880	1000	22	6	8
450 2-pole 4-pole to 8-pole	IM B5 flange	–	–	30	170 210	1080	1000	1150	26	6	8

■ The dimensions in brackets apply to 1MJ8 motors.

Squirrel-cage motors
Accessories and repair parts

Repair parts

- Siemens supply commitment for replacement motors and repair parts for the following periods after delivery of the motor:

  Up to 5 years — In the event of total motor failure Siemens will supply a fully compatible motor in terms of mounting dimensions and functions (possibly from a different Series).

  Up to 5 years — Repair parts can be supplied.

  Up to 10 years — Siemens provides information and, if necessary, documentation for repair parts.

- When ordering repair parts, the following data is required:
  – Part designation and number
  – Order No. and Serial No. of the motor

  Ordering example for a fan cowl 1LA7, frame size 160 M, 4-pole:
  Fan cowl No. 7.40 ,
  1LA7 163–4AA60, Product No. J783298901018

- See Section 2 for bearing selection tables.
- Repair parts for 1MJ6, 1MJ7, 1MJ8, 1MJ1, 1ME8, 1ML8, 1LG8, and smoke extraction motors on request.
- No obligation exists to supply spares of standard parts.
- Support – Hotline

  In Germany
  Tel.: 01 80/5 05 04 48

  For telephone numbers in other countries, visit the following page on the Internet
  http://www.siemens.com/automation/service&support

8/2 **Accessories**

Repair parts

8/3 1LA5
Frame sizes 180 M to 225 M

8/4 1LA7 and 1MA7
Frame sizes 56 M to 90 L

8/5 1LA6/7 and 1MA6/7
Frame sizes 100 L to 160 L

8/6 1LA6 and 1MA6
Frame sizes 180 M to 200 L

8/7 1LA6 and 1MA6
Frame sizes 225 M to 315 L

8/8 1LA8 and 1MA8
Frame sizes 315 to 450

8/10 1LG4 and 1LG6
Frame sizes 180 M to 250 M

8/12 1LG4 and 1LG6
Frame sizes 280 S to 315 L

Modular technology, slide rails, foundation blocks, taper pins, couplings, encoder mounting

Modular technology

The components of the modular installation concept can be ordered as accessories. The brake is not permitted to be retrofitted due to its relevance for safety.

Cables for rotary pulse encoders can be ordered according to Catalogue DA 65.11.

Mounting of separately driven fan for 1LA5, 1LA6, 1LA7 and 1LG motors

Design		Size	No. of poles	Order No.
Rotary pulse encoder	HTL version	100 to 225	all	**1XP8 001–1**
	TTL version	100 to 225	all	**1XP8 001–2**
Separately driven fan incl. mounting parts [1])		100	all	**2CW2 185-8RF14-1AA0**
		112	all	**2CW2 210-8RF14-1AA1**
		132	all	**2CW2 250-8RF14-1AA2**
		160	all	**2CW2 300-8RF14-1AA3**
		180	all	**2CW2 300-8RF14-1AA4**
		200	all	**2CW2 300-8RF14-1AA5**
		225 [2])	all	**2CW2 300-8RF14-1AA6**
		250	all	**1PP9 063-2LA12-Z A11+K50**
		280	all	**1PP9 063-2LA12-Z A11+K50**
		315	2	**1PP9 070-2LA12-Z A11+K50**
		315	4 to 8	**1PP9 063-2LA12-Z A11+K50**
Separately driven fan and rotary pulse encoder incl. mounting parts [1])		100	all	**2CW2 185-8RF14-2AA0**
		112	all	**2CW2 210-8RF14-2AA1**
		132	all	**2CW2 250-8RF14-2AA2**
		160	all	**2CW2 300-8RF14-2AA3**
		180	all	**2CW2 300-8RF14-2AA4**
		200	all	**2CW2 300-8RF14-2AA5**
		225 [2])	all	**2CW2 300-8RF14-2AA6**

Slide rails with fixing bolts and tensioning screws to DIN 42 923

Slide rails are an easy and convenient means of adjusting the belt tension of a machine in the absence of an idler pulley. They are secured to the foundation with rag bolts or foundation blocks.

The assignment of slide rails to motor frame sizes is stated in DIN 42 923.
No standard slide rails are available for motors of frame sizes 355 to 450 (please inquire).

Source:
Lütgert & Co. GmbH
PO Box 42 51
D-33276 Güthersloh
Tel. +49 52 41-74 07-0
Fax +49 52 41-74 07-90
http://www.luetgert-antriebe.de
e-mail:
luetgert-antriebe@t-online.de

Foundation blocks to DIN 799

Foundation blocks are recessed into concrete foundations and grouted with cement. They have a number of uses, e.g. for fixing medium-sized machines, slide rails, pedestal bearings and base frames. After the fixing bolts have been removed, a machine can be shifted as required without having to lift it.

During initial installation, the foundation blocks, which are pinned and bolted to the machine (without shims), are not grouted until the latter has been properly aligned. The machine is first set down 2 to 3 mm lower than its first final position. The difference between the shaft heights is compensated by means of shims during the final assembly. The taper pins enable the machine to be repositioned accurately without having to realign it whenever it is removed and replaced.

Source:
Lütgert & Co. GmbH
PO Box 42 51
D-33276 Güthersloh
Tel. +49 52 41-74 07-0
Fax +49 52 41-74 07-90
http://www.luetgert-antriebe.de
e-mail:
luetgert-antriebe@t-online.de

Taper pins to DIN 258 with threaded ends and constant taper lengths

The purpose of taper pins is to ensure that parts which are frequently disassembled are aligned accurately. The hole for the taper pin is reamed so that, when the pin is inserted by hand, there is still about 3 to 4 mm of the taper projecting above the hole rim.

The pin is driven in fully with a hammer.

The pin is extracted by tightening a nut down on its threaded end.

Standard taper pins are available from normal commercial sources.

Source:
Otto Roth GmbH & Co. KG
Bäumleinsberg 54
91233 Neukirchen am Sand
Tel. +49 91 23-94 00 10
Fax +49 91 23-94 00 15

Couplings

In the majority of applications, the motor is connected to the drive by means of a flexible coupling.

Source:
KTR Kupplungstechnik GmbH
Rodder Damm 170
48432 Rheine
Tel. +49 59 71-7 98-0
Fax +49 59 71-7 98-6 98
http://www.ktr.de

Encoder mounting

On delivery or mounted by the customer.

Options: H74, H79, H75, H80
Hübner Elektromaschinen AG
10967 Berlin
Planufer 92b
Tel. +49 30-6 90 03-0
Fax +49 30-6 90 03-1 04
http://www.huebner-berlin.de

Options H71, H78
Leine & Linde (Deutschland) GmbH
73430 Aalen
Spitalstr. 19
Tel. +49 73 61-96 16 36
Fax +49 73 61-96 16 35
http://www.leinelinde.de

1) The separately driven fan 2CW2 . . . includes a fan unit with fan impeller, the separately driven fan 1PP9 . . . only includes the fan motor.

2) For 1LG motors with separately driven fan with Order No. 1PP9063-2LA12-Z A11+K50 (weight: 4.37 kg).

Selection and ordering data

For motor Size	Type
180 M	1LA5 183
180 L	1LA5 186
200 L	1LA5 206
	1LA5 207
225 M	1LA5 220
	1LA5 223

Motor (operating instructions 610.42348/21)

Part No.	Designation
1.40	Bearing shield at drive end
1.43/**6**.23	V ring
4.07	Housing feet (2 units)
5.00	Terminal box, complete with terminal board
5.10	Terminal board
6.20	Bearing shield at non-drive end
7.04	External fan
7.40	Fan cowl

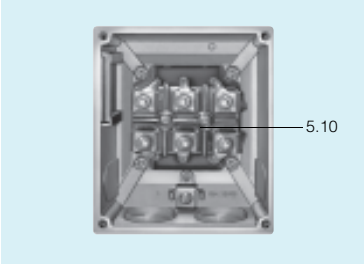

Terminal box gk 330

Terminal box gk 430

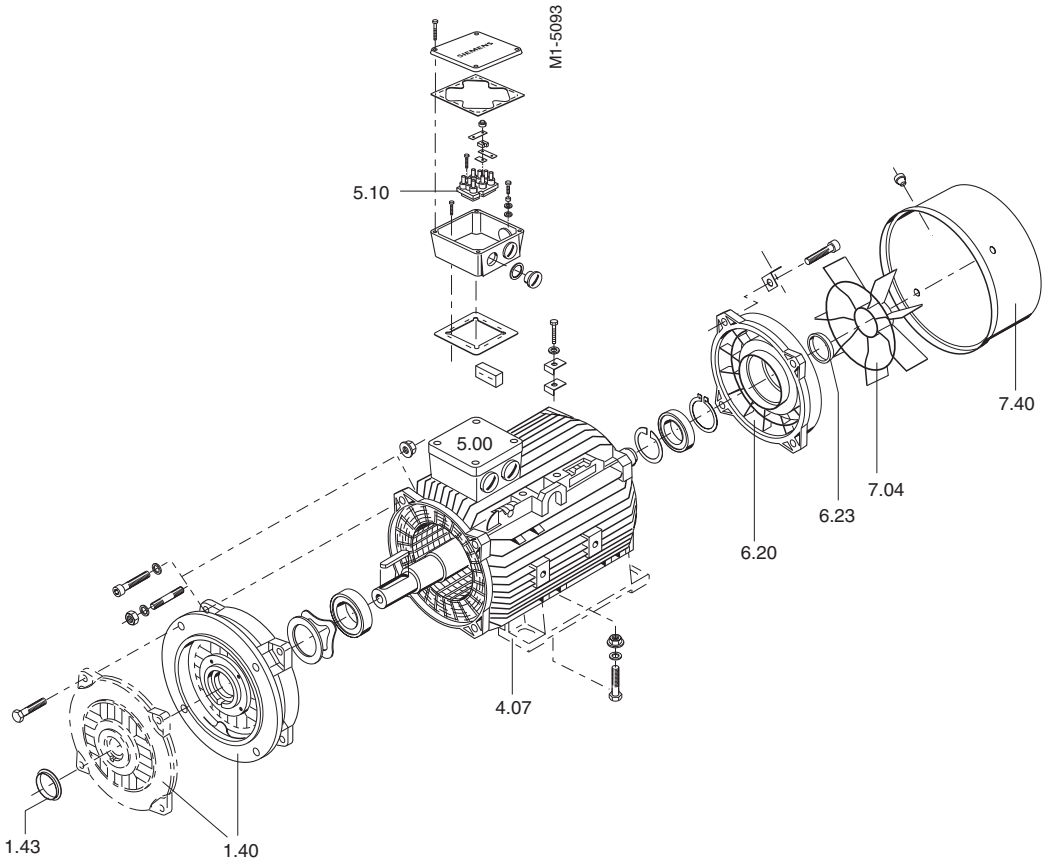

Repair parts

1LA7 and 1MA7 squirrel-cage motors
Frame sizes 56 to 90

Selection and ordering data

For motor Size	Type 1LA7 . . . , 1MA7 . . .
56 M	. . . . 050 053
63 M	. . . . 060 063
71 M	. . . . 070 073
80 M	. . . . 080 083
90 S 90 L	. . . . 090 096

Motor (op. instr. 5.61070000.10.000)

Part No.	Designation
1.40	Bearing shield at drive end (a spring band is supplied if required)
1.43/**6**.23	Shaft seal
4.07	Housing feet (2 units)
5.00	Terminal box, complete with terminal board
5.10	Terminal board
6.20	Bearing shield at non-drive end
7.04 **7**.40	External fan Fan cowl
1.61	Spring band (for bearing shield hub at drive end, specify bearing size 6205, 6206, 6208)

5.10 Terminal board

For motor Type	Order No.
1LA7 05 . to 1LA7 09 .	**1LY7 113**
1MA7 06 . to 1MA7 09 .	**1LY7 116**

7.04 External fan

For motor Size	Type 1LA7 . . . , 1MA7 . . .	Order No. Thermo-plastic	Metal
63	. . . . 06 .	**1LY7 001**	**1LY7 201**
71	. . . . 07 .	**1LY7 002**	**1LY7 202**
80	. . . . 08 .	**1LY7 003**	**1LY7 203**
90	. . . . 09 .	**1LY7 025**	**1LY7 225**

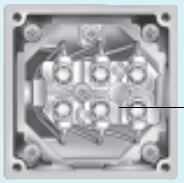

Terminal box gk 030 for 1LA7 motors

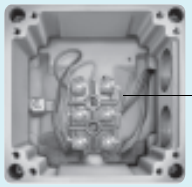

Terminal box gk 130 for 1MA7 motors

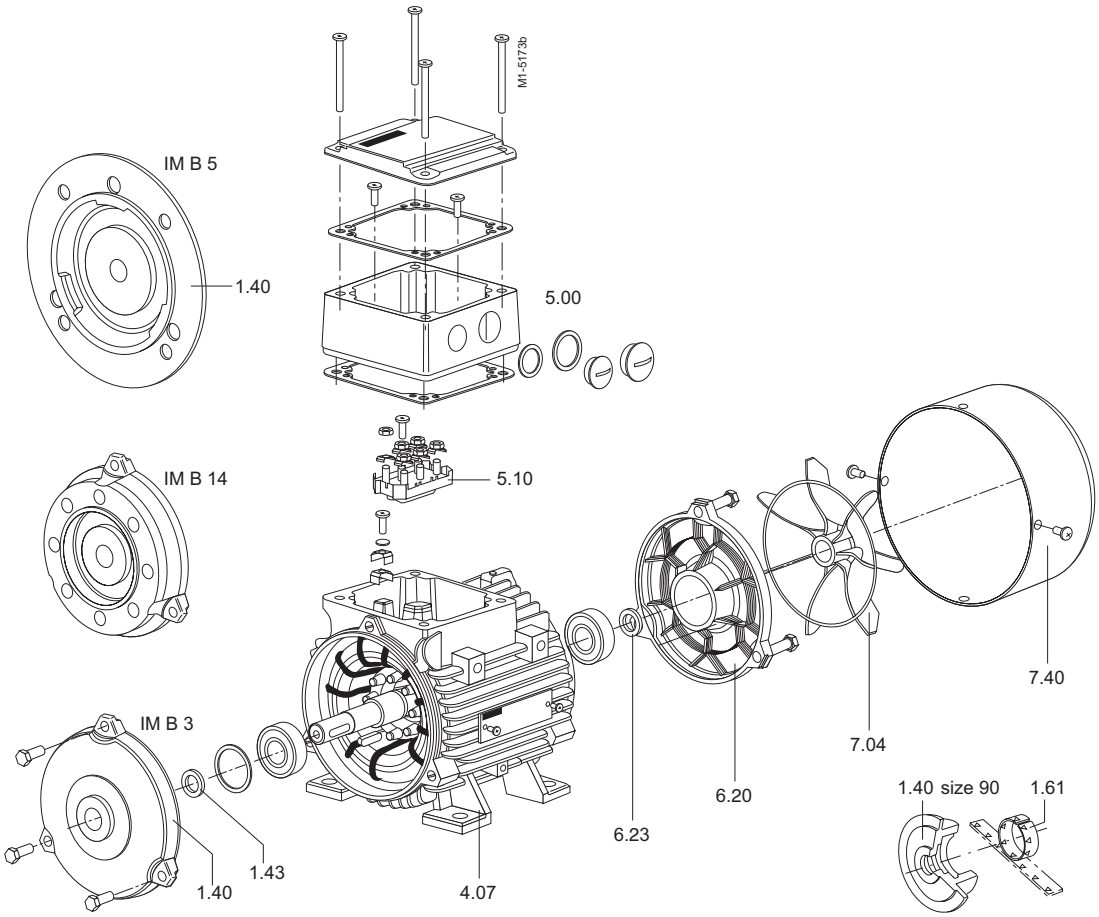

Selection and ordering data

For motor Size	Type 1LA7 . . . , 1MA7 . . .
100 L	 106
112 M	 113
132 S	. . . . 130 131
160 M	. . . . 163 164
160 L	 166

Motor (op. instructions 5.61070000.10.000)

Part No.	Designation
1.40	Bearing shield at drive end (a spring band is supplied if required)
1.43/**6**.23	Shaft seal
4.07	Housing feet (2 units)
5.00	Terminal box cover*, complete with terminal board
5.10	Terminal board
5.90	Terminal box on right or left side (order codes **K09** or **K10** respectively)
6.20	Bearing shield at drive end (a spring band is supplied if required)
7.04	External fan
7.40	Fan cowl
1.61/**6**.11	Spring band (for bearing shield hub drive end and non-drive end, specify bearing size 6206 or 6208)

* Terminal box is cast-on

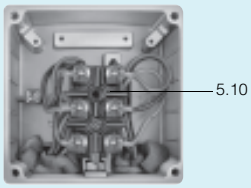

Terminal box gk 330 (1LA7)

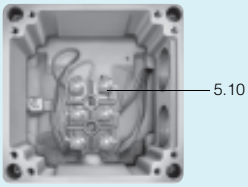

Terminal box gk 335 (1LA6)

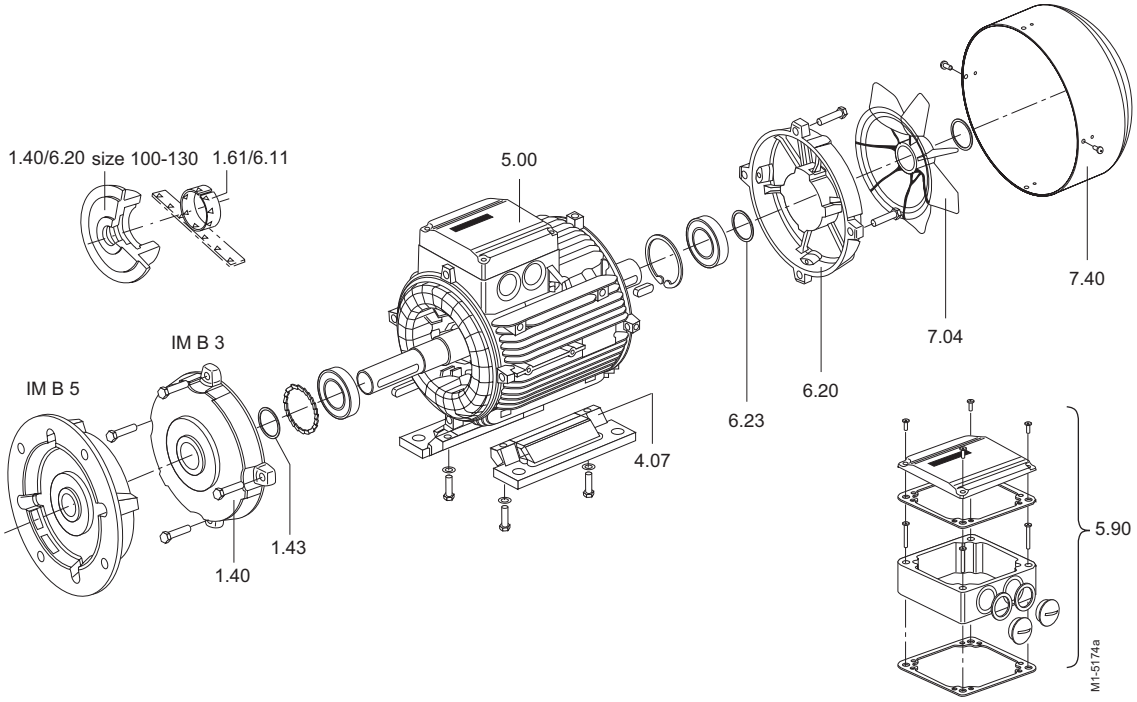

Repair parts

1LA6 and 1MA6 squirrel-cage motors
Frame sizes 180 M to 200 L

Selection and ordering data

For motor Size	Type 1LA6 . . . , 1MA6 . . .
180 M	 183
180 L	 186
200 L	. . . . 206 207

Motor (operating instructions 610.43106/21)

Part No.	Designation
1.40	Bearing shield at drive end
1.43/**6**.23	V ring
4.07	Housing feet (2 units)
5.00	Terminal box, complete with terminal board
5.10	Terminal board
6.20	Bearing shield at non-drive end
7.04	External fan
7.40	Fan cowl

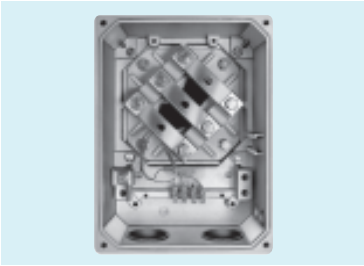

Terminal box 1XB7 222

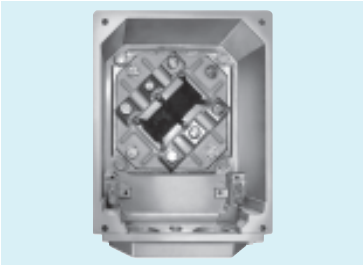

Terminal box 1XB7 322

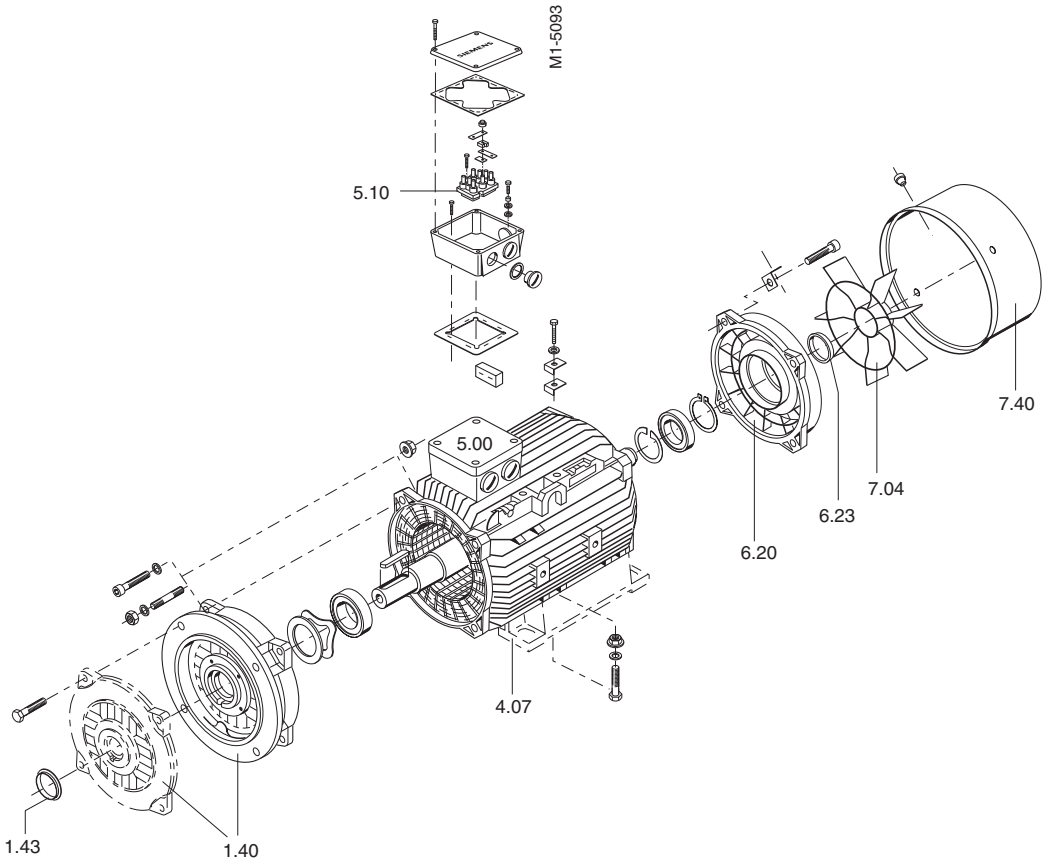

Selection and ordering data

For motor Size	Type 1LA6 . . . , 1MA6 . . .
225 M	 220
225 M	 223
250 M	 253
280 S	 280
280 M	 283
315 S	 310
315 M	 313
315 L	 316
	 317
	 318

Motor (op. instructions NMA 2748 DE)

Part No.	Designation
5.00	Bearing shield at drive end
5.10	Flange bearing shield
6.00	Bearing shield at non-drive end
8.00	Rotor complete with external fan and rolling-contact bearing
10.10	Housing feet (2 units)
11.00	External fan
12.01	Fan cowl
12.70	Protective cover
20.00	Terminal box, complete with terminals

Bearing (op. instructions NMA 2924 DE)

Part No.	Designation
4.20	Outer bearing cap on drive end
4.60	Inner bearing cap on drive end
3.20	Outer bearing cap on non-drive end
3.60	Inner bearing cap on non-drive end
3.10/**4**.10	V ring

1XB7 terminal box for frame sizes 225 M to 400 L (op. instructions NMA 2923 DE)

Part No.	Designation
20.30	Terminal box cover
21.40	Insulating plate (terminal board) without terminals

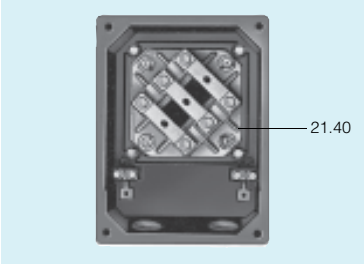

Terminal box 1XB7 222

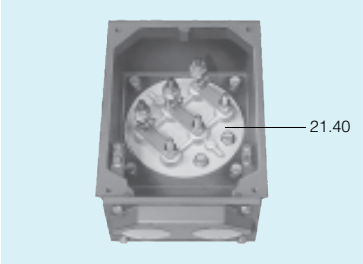

Terminal box 1XB7 422 to 1XB7 522

Terminal box 1XB7 322

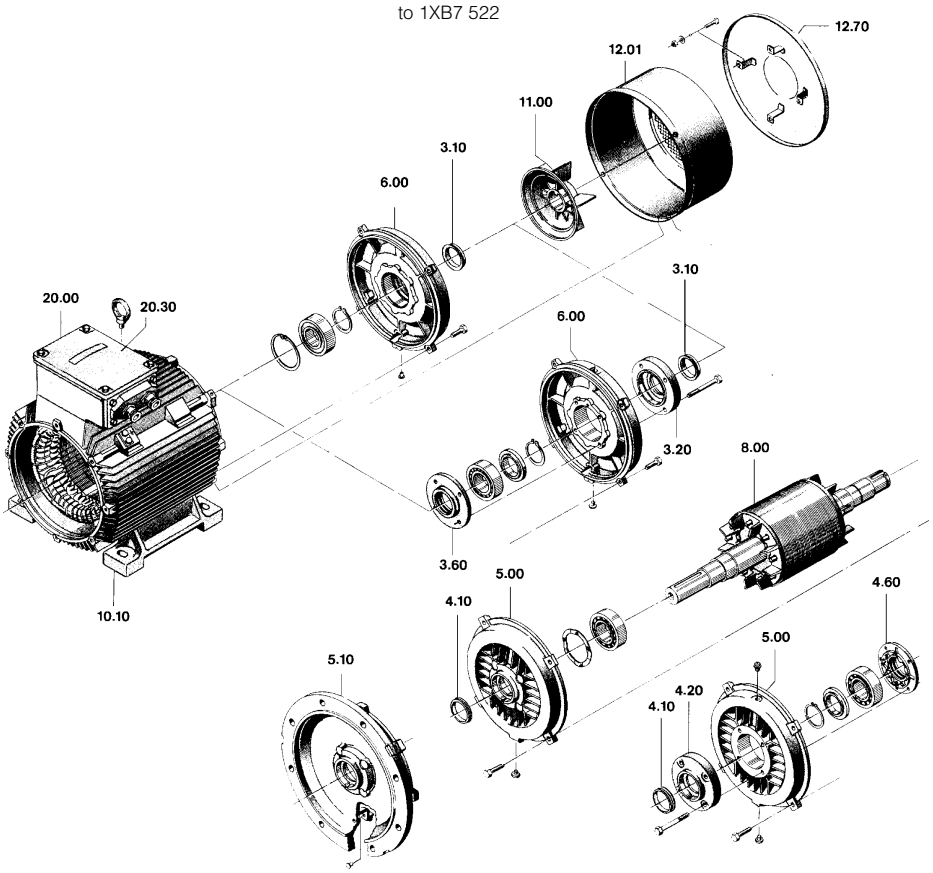

1LA8 and 1MA8 squirrel-cage motors
Frame sizes 315 to 450

Selection and ordering data

For motor	
Size	Type 1LA8 . . . , 1MA8 . . .
315	. . . . 315 317
355	. . . . 353 . . . . 355 357
400	. . . . 403 . . . . 405 407
450	. . . . 453 . . . . 455 457

Motor (operating instructions NMA 3420 DE)

Part No.	Designation
5.00	Bearing shield at drive end
5.10	Flange bearing shield
6.00	Bearing shield at non-drive end
7.07	Integral fan
8.00	Rotor complete with external fan and rolling-contact bearing
11.04	External fan, unidirectional
11.05	External fan, bi-directional
12.01	Fan cowl
12.70	Protective cover
20.00	Terminal box, complete with terminals

Bearing (operating instructions NMA 2934, 2935, 2936 DE)

Part No.	Designation
3.20	Outer bearing cap on drive end
3.60	Inner bearing cap on drive end
4.20	Outer bearing cap on non-drive end
4.60	Inner bearing cap on non-drive end
3.10/**4**.10	V ring

1XB7 terminal box for frame sizes 315 and 355 (operating instructions NMA 2923 DE)

Part No.	Designation
20.30	Terminal box cover
21.40	Insulating plate (terminal board) without terminals

1XB1 terminal box for frame sizes 400 and 450 (operating instructions NMA 2937 DE)

Part No.	Designation
20.00	Terminal box, complete
20.30	Terminal box cover Terminal post insulator

Terminal box 1XB1 621

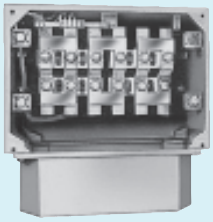

Terminal box 1XB1 631

Terminal box gt 640

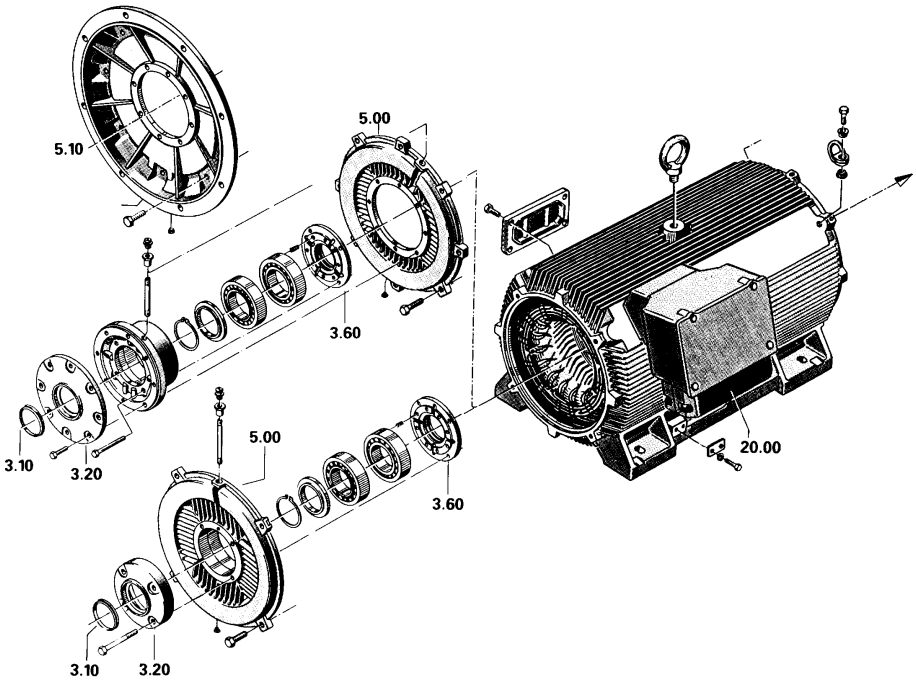

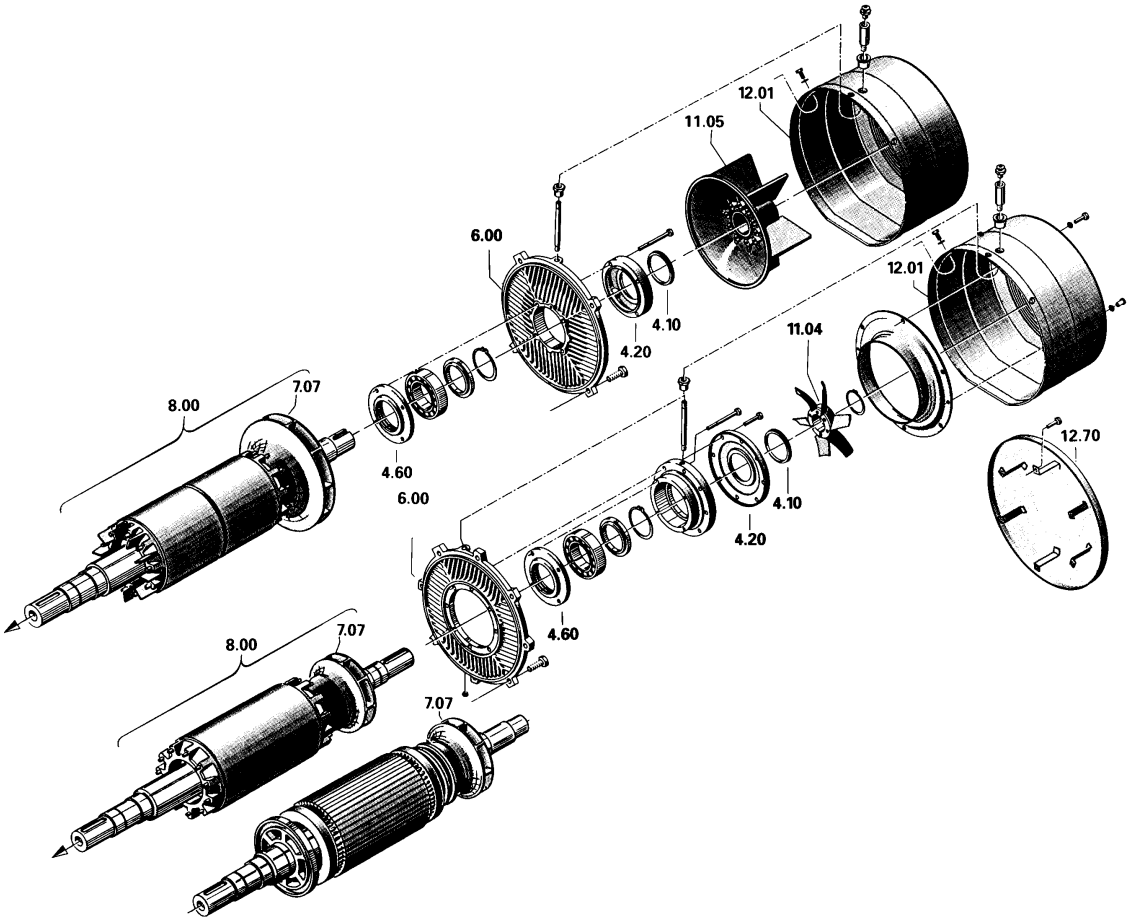
12.01
11.05
6.00
4.10
4.20
12.01
11.04
8.00
7.07
4.60
6.00
4.10
4.20
12.70
8.00
7.07
4.60
7.07

1LG4, 1LG6 squirrel-cage motors
Frame sizes 180 M to 250 M

Selection and ordering data

For motor Size	Type 1LG4 . . . , 1LG6 . . .
180 M	 183
180 L	 186
	 188
200 L	 206
	 207
	 208
225 S	 220
225 M	 223
	 228
250 M	 253
	 258

Mounting and removal tackle is not supplied for rolling contact bearings, fans and drive components!

Motor (op. instructions 35037000000057)

Part No.	Designation
1.00	Drive-end bearing
1.40	Bearing shield
1.43	Shaft seal
1.58	Spring lock washer
1.60	Rolling contact bearing
1.61	Sealing plugs
1.65	Bearing cap
1.67	Outer bearing cap
1.68	Spun washer
1.69	Compression spring
3.00	Rotor, complete
4.00	Stator, complete
4.07	Housing feet (size 180 – right, left)
4.18	Rating plate
4.35	Washer
4.40	Washer
4.41	Earthing strap
5.00	Terminal box, complete
5.03	Seal (size 200, string seal)
5.10	Terminal board, complete
5.33	Non-rotating washer
5.34	Terminal clamp
5.35	Grommets
5.44	Terminal box, top section
5.51	Nut

Part No.	Designation
5.52	Terminal link
5.70	Terminal clamp
5.71	Outer bearing cap
5.72	Spun washer
5.83	Gasket
5.84	Terminal box cover
5.89	Screw
5.94	Screw
5.95	Terminal
5.96	Mounting rail
5.97	Brace, complete
5.99	Contact plate
6.00	Bearing, non-drive end
6.10	Rolling contact bearing
6.20	Bearing shield
6.23	Shaft seal
6.24	Bearing cap
6.65	Grease nipple
6.66	Rubber socket
6.67	Lubrication pipe
7.00	Ventilation, complete
7.04	Fan
7.40	Fan cowl
7.41	Bracket
7.49	Screw

8

Standard version

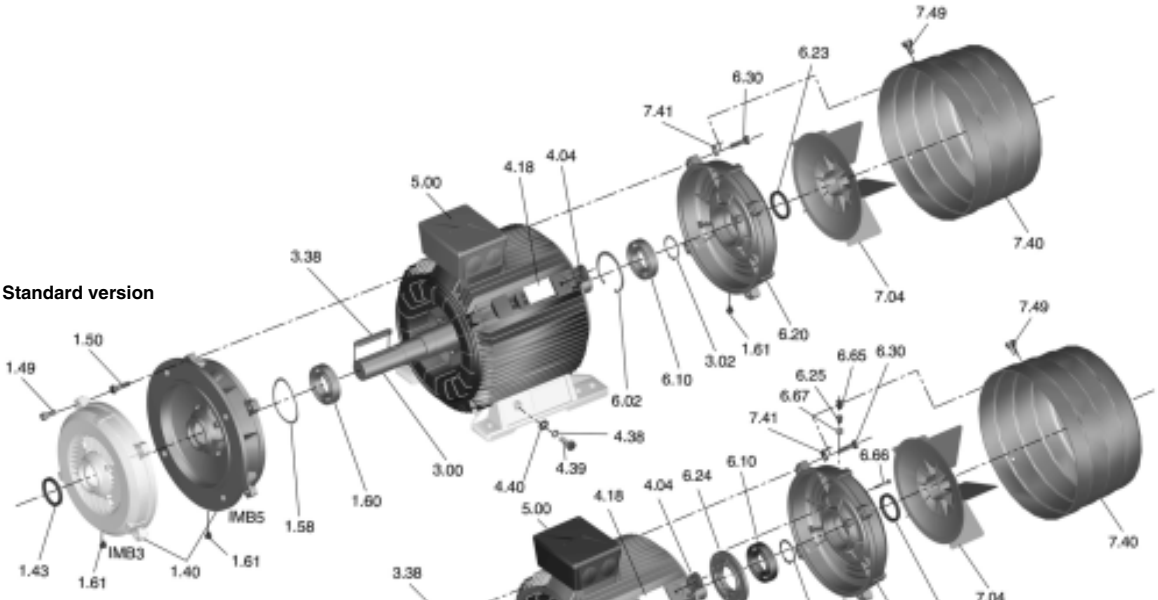

Version with regreasing device and screwed on feet

gk 330

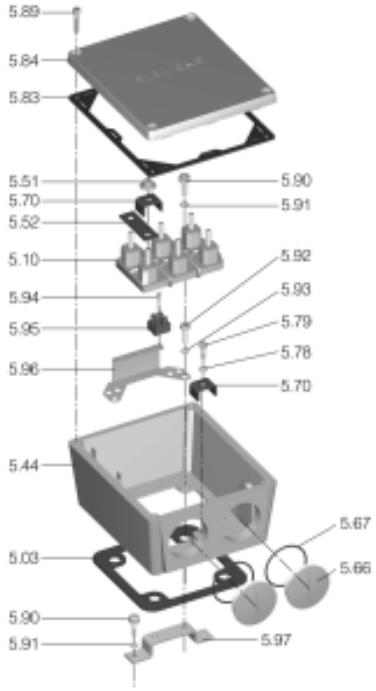

gk 430

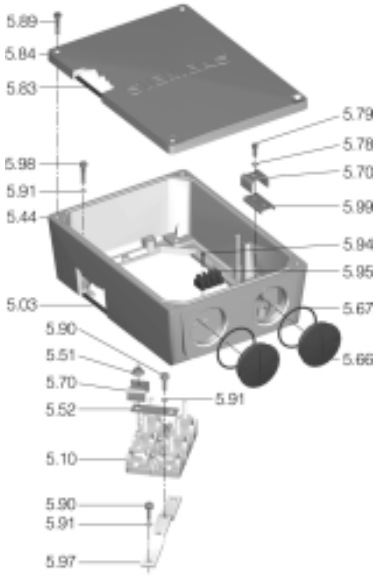

gt 431

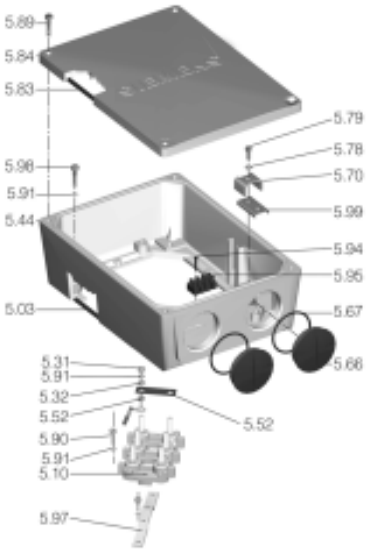

gt 520

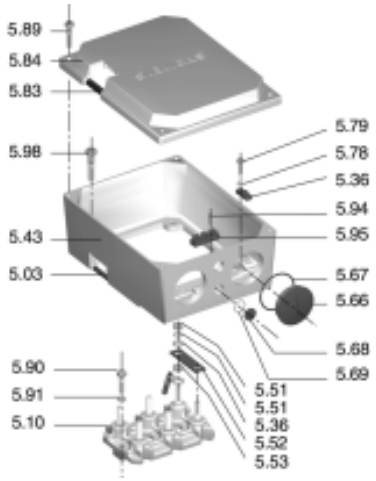

8

1LG4, 1LG6 squirrel-cage motors
Frame sizes 280 S to 315 L

Selection and ordering data

For motor Size	Type 1LG4 . . . , 1LG6 . . .
280 S	 280
280 M	 283
	 288
315 S	 310
315 M	 313
315 L	 316
	 317
	 318

Mounting and removal tackle is not supplied for rolling contact bearings, fans and drive components!

Motor (op.instructions 35037000000057)

Part No.	Designation
1.00	Drive-end bearing
1.40	Bearing shield
1.43	Shaft seal
1.58	Spring lock washer
1.60	Rolling contact bearing
1.61	Sealing plugs
1.65	Bearing cap
1.67	Outer bearing cap
1.68	Spun washer
1.69	Compression spring
3.00	Rotor, complete
4.00	Stator, complete
4.07	Housing feet (size 180 – right, left)
4.18	Rating plate
4.35	Washer
4.40	Washer
4.41	Earthing strap
5.00	Terminal box, complete
5.03	Seal (size 200, string seal)
5.10	Terminal board, complete
5.33	Non-rotating washer
5.34	Terminal clamp
5.35	Grommets
5.44	Terminal box, top section
5.51	Nut

Part No.	Designation
5.52	Terminal link
5.70	Terminal clamp
5.71	Outer bearing cap
5.72	Spun washer
5.83	Gasket
5.84	Terminal box cover
5.89	Screw
5.94	Screw
5.95	Terminal
5.96	Mounting rail
5.97	Brace, complete
5.99	Contact plate
6.00	Bearing, non-drive end
6.10	Rolling contact bearing
6.20	Bearing shield
6.23	Shaft seal
6.24	Bearing cap
6.65	Grease nipple
6.66	Rubber socket
6.67	Lubrication pipe
7.00	Ventilation, complete
7.04	Fan
7.40	Fan cowl
7.41	Bracket
7.49	Screw

Version with screwed on feet

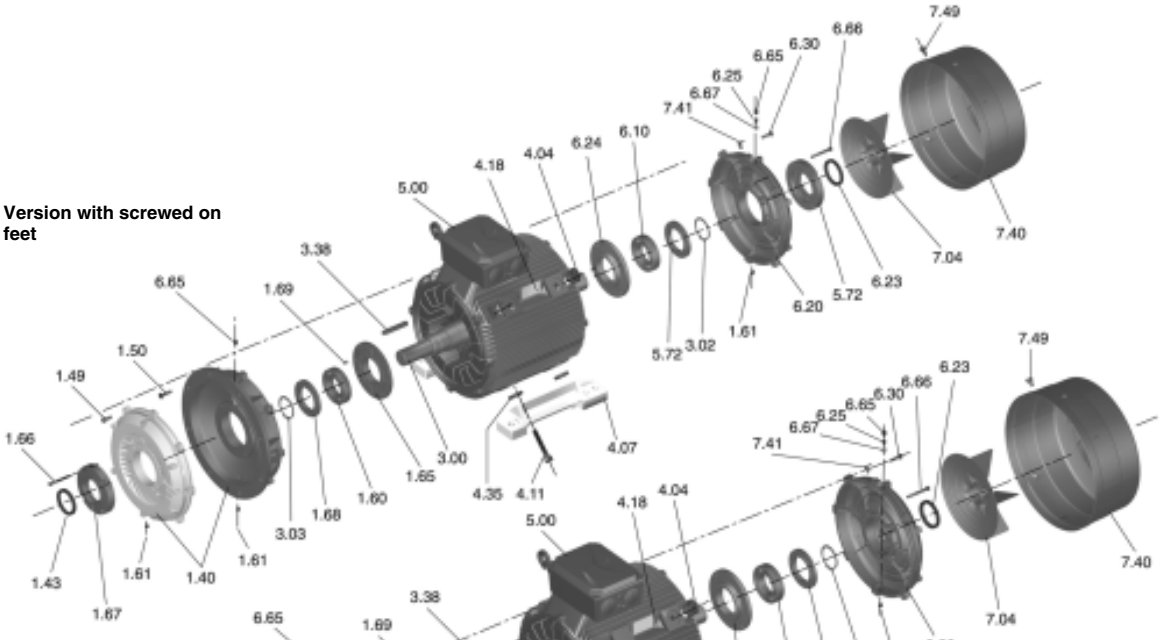

Standard version

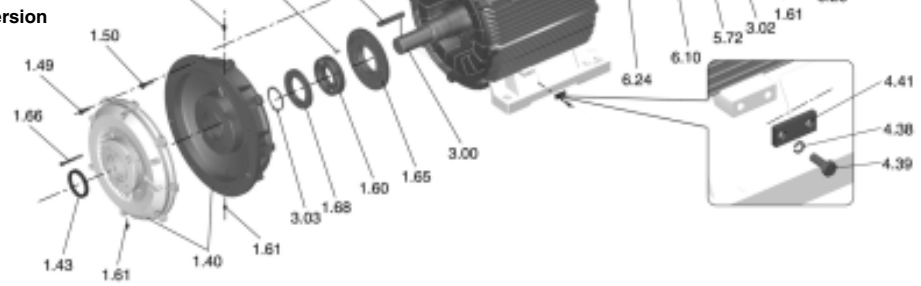

gt 520

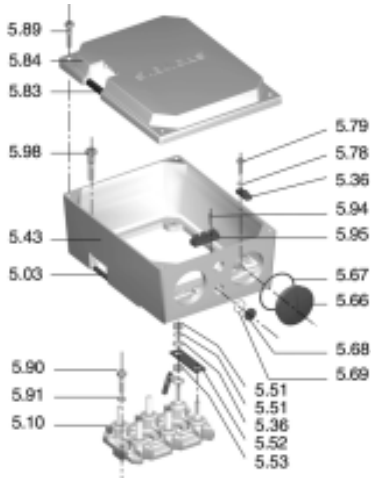

gt 620

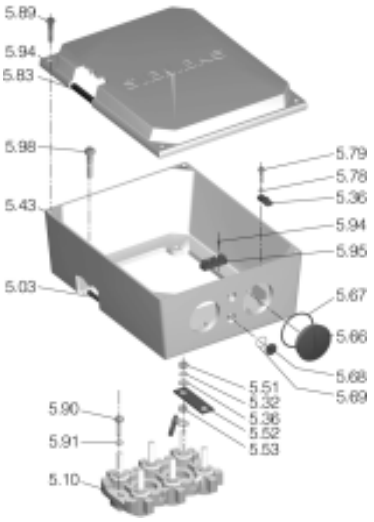

8

Notes

Squirrel-cage motors
Appendix

Environment, resources and recycling

Siemens AG has committed itself to protecting the environment and conserving valuable natural resources. This applies both to production and to the products we sell. As early as the development phase, the possible impact of future products and systems on the environment is taken into consideration. Our aim is to prevent environmental pollution or, at least, reduce it to a minimum and in doing so, look beyond existing regulations and legislation. The most important activities in the protection of the environment are:

- We are constantly endeavoring to minimize the environmental impact of our products as well as their consumption of energy and resources over and above the statutory environmental protection regulations.
- We take every possible step to prevent damage to the environment.
- The environmental impact is assessed and considered at the earliest possible stage of product and process planning.
- Our optimized environmental management strategy ensures that our environmental policy is effectively implemented. The technical and administrative procedures required for this purpose are reviewed at regular intervals and continuously updated.
- Environmental awareness is expected of all our employees. It is a permanent management task to consolidate and promote responsibility for the environment at all levels.
- We encourage our contract partners to act in accordance with the same environmental principles as ourselves. We cooperate with the responsible public authorities.
- We inform interested members of the public about the consequences of our corporate policies for the environment as well as our achievements to the benefit of the environment.
- All documentation is printed on chlorine-free bleached paper.

A/2 Overview of MICROMASTER 410/420/430/440

A/3 Overview of MICROMASTER 411/ COMBIMASTER 411

A/4 Overview of customized motors

A/5 Siemens contact persons

Service & Support

A/6 Information and ordering on the Internet and on CD-ROM

A/7 Our services for each project phase

A/8 Customer support

A/9 Subject index

A/11 Order number index

A/14 Conditions of sale and delivery
Export regulations

A

Overview of MICROMASTER 410/420/430/440

The MICROMASTER inverters from Siemens ideally complement the motors. The table gives an overview of the features of these inverters.

The complete product spectrum with ordering data, technical details and explanations is included in Catalogue DA 51.2.

You will find up-to-date information about AC inverters on the Internet at

http://www.siemens.com/micromaster

	MICROMASTER 410	MICROMASTER 420	MICROMASTER 430	MICROMASTER 440
Main features	**"Price-conscious"** For variable speeds with 3-phase motors on single-phase supply systems, e.g. for pumps, fans, advertising panels, cabinets, gate drives and dispensing machines	**"Universal"** For 3-phase supply systems as well as optional fieldbus interfacing, e.g. in conveyor belts, material conveyors, pumps, fans and machine tools	**"Optimized for pumps and fans"** With optimized operator panel (manual/automatic changeover) adapted software functions and optimum power utilization	**"Comprehensive"** With finely tuned vector control (with and without sensor feedback) for numerous applications in sectors such as conveyor systems, textiles, elevators, hoisting gear and mechanical engineering
Output range	0.12 kW to 0.75 kW	0.12 kW to 11 kW	7.5 kW to 250 kW	0.12 kW to 250 kW
Voltage ranges	1 AC 100 V to 120 V 1 AC 200 V to 240 V	1 AC 200 V to 240 V 3 AC 200 V to 240 V 3 AC 380 V to 480 V	3 AC 380 V to 480 V	1 AC 200 V to 240 V 3 AC 200 V to 240 V 3 AC 380 V to 480 V 3 AC 500 V to 600 V
Closed-loop control	*V/f* characteristic Multipoint characteristic (parameterizable *V/f* characteristic) FCC (flux current control)	*V/f* characteristic Multipoint characteristic (parameterizable *V/f* characteristic) FCC (flux current control)	*V/f* characteristic Multipoint characteristic (parameterizable *V/f* characteristic) FCC (flux current control)	*V/f* characteristic Multipoint characteristic (parameterizable *V/f* characteristic) FCC (flux current control) Vector Control
Process control	–	Internal PI controller	Internal PI controller (auto tuning)	Internal PI controller (auto tuning)
Inputs	3 digital inputs 1 analog input	3 digital inputs 1 analog input	6 digital inputs 2 analog inputs 1 PTC/KTY input	6 digital inputs 2 analog inputs 1 PTC/KTY input
Outputs	1 relay output	1 analog output 1 relay output	2 analog outputs 3 relay outputs	2 analog outputs 3 relay outputs
Automation link	The PLC partner for LOGO®! and SIMATIC® S7-200	The ideal partner for your automation tasks, for SIMATIC S7-200 as well as for SIMATIC S7-300/400 (TIA) and SIMOTION®	The ideal partner for your automation tasks, for SIMATIC S7-200 as well as for SIMATIC S7-300/400 (TIA) and SIMOTION	The ideal partner for your automation tasks, for SIMATIC S7-200 as well as for SIMATIC S7-300/400 (TIA) and SIMOTION
Other features	Natural ventilation (no fan) Position of the connections as for conventional switching elements (e.g. contactors). Also available with flat plate heatsink.	BICO technique	Energy-saving mode Load torque monitoring (detects dry running of pumps) Motor staging	3 selectable drive data sets Integral brake chopper (up to 75 kW) Torque control

Examples
MICROMASTER

A

Overview of MICROMASTER 411/ COMBIMASTER 411

The MICROMASTER 411/ COMBIMASTER 411 inverters from Siemens are available for decentralized solutions. The table gives an overview of the features of these products. The complete product spectrum with ordering data, technical details and explanations can be found in Catalogue DA 51.3 MICROMASTER – COMBIMASTER.

You will find up-to-date information on MICROMASTER 411 and COMBIMASTER 411 on the Internet at ***http://www.siemens.com/combimaster***

	MICROMASTER 411	**COMBIMASTER 411**
Main features	**"Decentralized"** For a wide range of drives – simple stand-alone applications from pumps and fans through to multiple conveyor drives in networked control systems.	
Output range	0.37 kW to 3 kW	
Voltage ranges	3 AC 380 V to 480 V	
Housing/ frame sizes	CS B CS C	71 – 100 90/100
Types of construction	–	IM B 3 IM B 5 IM V 1 (without protective cover) IM V 1 (with protective cover) IM B 14 (with standard flange) IM B 14 (with special flange) IM B 35
Degree of protection	IP66	IP55
Other technical features	*V/f* characteristic Multipoint characteristic (parameterizable *V/f* characteristic) FCC (flux current control) Internal PI controller 3 digital inputs 1 analog input 1 relay output Compound braking for controlled rapid braking NEW: ECOFAST variants with connectors for the power supply and communication interfaces and motor connections to permit fast and easy replacement for time-critical applications. The ECOFAST variants are fully compatible with the ECOFAST technology systems.	

Examples MICROMASTER

Examples COMBIMASTER

A

Overview of customized motors

In addition to the products offered in the catalogue, our range of motors also includes "customized motors".

This means that we develop individual drive solutions for your special requirements, deliver samples of them if necessary, and supply them in accordance with your logistical requirements.

Our representatives worldwide as well as our regional representatives in Germany can, of course, also be contacted in this regard (see Page A/5).

Please request a quotation.

In the following text, we have listed some of the "customized solutions" already implemented:

- High-quality motors for textile machines and compressors
- Motors with increased power
- Liquid-cooled motors
- Synchronous generators for spare-current sources
- Motors for wood machining plant
- Integral motors for cooling motors/compressors (refrigerator-proof)
- Roller motors for unsmooth running (e.g. rolling mill drive)
- Pump motors with special shafts / special materials
- Single-phase motors for industrial use
- Hoisting gear motors

Integral motors for refrigeration

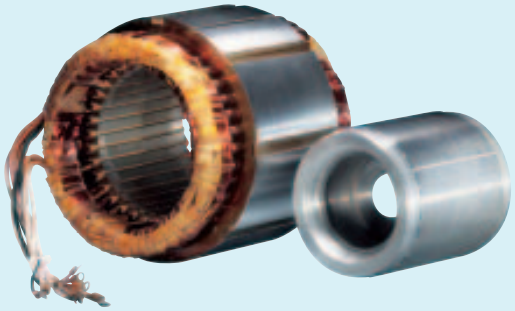

Roller motors for unsmooth running

Pump motor with special shafts / special materials

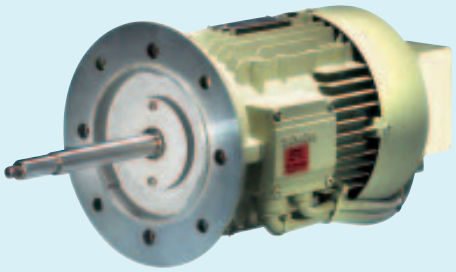

Hoisting gear motor

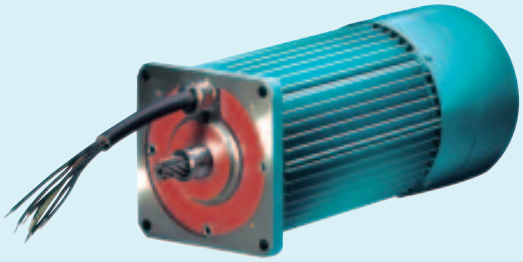

A

Siemens contact persons

At

www.siemens.com/automation/partner

you can find details of Siemens contact partners worldwide responsible for particular technologies.

You can obtain in most cases a contact partner for

- Technical Support,
- Spare parts/repairs,
- Service,
- Training,
- Sales or
- Consultation/engineering.

You start by selecting a

- Country,
- Product or
- Sector.

By further specifying the remaining criteria you will find exactly the right contact partner with his/her respective expertise.

Need more Information?

Then fax us!
Under the fax no.
0 08 00-74 62 84 27
you will find further information.

A

Information and ordering on the Internet and on CD-ROM

A&D in the WWW

A detailed knowledge of the range of products and services available is essential when planning and configuring automation systems. It goes without saying that this information must always be fully up-to-date.

The Siemens Automation and Drives Group (A&D) has therefore built up a comprehensive range of information in the World Wide Web, which offers quick and easy access to all data required.

Under the address

http://www.siemens.com/automation

you will find everything you need to know about products, systems and services.

Product Selection Using the Interactive Catalogue

Detailed information together with convenient interactive functions: The interactive catalogue CA 01 covers more than 80,000 products and thus provides a full summary of the Siemens Automation and Drives product base.

Here you will find everything that you need to solve tasks in the fields of automation, switchgear, installation and drives.
All information is linked into a user interface which is easy to work with and intuitive.

After selecting the product of your choice you can order at the press of a button, by fax or by online link.

Information on the interactive catalogue can be found in the Internet under

http://www.siemens.com/automation/ca01

or on CD-ROM:

- Automation & Drives CA 01,
  Order No.: E86060-D4001-A110-C1-7600

A

Easy Shopping with the A&D Mall

The A&D Mall is the virtual department store of Siemens AG in the Internet. Here you have access to a huge range of products presented in electronic catalogues in an informative and attractive way.

Data transfer via EDIFACT allows the whole procedure from selection through ordering to tracking of the order to be carried out online via the Internet.

Numerous functions are available to support you.

For example, powerful search functions make it easy to find the required products, which can be immediately checked for availability. Customer-specific discounts and preparation of quotes can be carried out online as well as order tracking and tracing.

Please visit the A&D Mall on the Internet under:

http://www.siemens.com/automation/mall

Our services for each project phase

In the face of harsh competition you need optimum conditions to keep ahead all the time:
A strong starting position. A sophisticated strategy and team for the necessary support – in every phase.
Service & Support from Siemens provides this support with a complete range of different services for automation and drives.

In every phase: from planning and startup to maintenance and upgrading.

Our specialists know when and where to act to keep the productivity and cost-effectiveness of your system running in top form.

Online Support

The comprehensive information system available round the clock via Internet ranging from Product Support and Service & Support services to Support Tools in the Shop.

http://www.siemens.com/automation/service&support

Technical Support

Competent consulting in technical questions covering a wide range of customer-oriented services for all our products and systems.

Tel.: +49 (0)180 50 50 222
Fax: +49 (0)180 50 50 223

E-Mail:
adsupport@siemens.com

Technical Consulting

Support in the planning and designing of your project from detailed actual-state analysis, target definition and consulting on product and system questions right to the creation of the automation solution. [1])

Configuration and software engineering

Support in configuring and developing with customer-oriented services from actual configuration to implementation of the automation project. [1])

Service On Site

With Service On Site we offer services for startup and maintenance, essential for ensuring system availability.

In Germany
0180 50 50 444 [2])

Repairs and Spare Parts

In the operating phase of a machine or automation system we provide a comprehensive repair and spare parts service ensuring the highest degree of operating safety and reliability.

In Germany
0180 50 50 448 [2])

Optimization and Upgrading

To enhance productivity and save costs in your project we offer high-quality services in optimization and upgrading. [1])

1) Get in touch with the sales contact in your region for questions about these services. Our Helpline (tel.: +49 (0) 180 50 50 111) will also put you through to the right contact or just visit our Internet site.

2) For country-specific telephone numbers go to our Internet site at:
http://www.siemens.com/automation/service&support

Customer Support

Knowledge Base on CD-ROM

For locations without online connections to the Internet there are excerpts of the free part of the information sources available on CD-ROM (Service & Support Knowledge Base). This CD-ROM contains all the latest product information at the time of production (FAQs, Downloads, Tips and Tricks, Updates) as well as general information on Service and Technical Support.

The CD-ROM also includes a full-text search and our Knowledge Manager for targeted searches for solutions. The CD-ROM will be updated every 4 months.

Just the same as our online offer in the Internet, the Service & Support Knowledge Base on CD comes complete in 5 languages (German, English, French, Italian, Spanish).

You can order the **Service & Support Knowledge Base** CD from your Siemens contact.

Order no. **6ZB5310-0EP30-0BA2**

Orders via the Internet
(with Automation Value Card or credit card) at:

http://www.siemens.com/automation/service&support

in the Shop domain.

Automation Value Card

Small card – great support

The Automation Value Card is an integral component of the comprehensive service concept with which Siemens Automation and Drives accompanies your whole automation project in each phase.

Whether you require specific services from our technical support or purchase high-quality support tools in our online shop: You can always pay with your Automation Value Card. Easily, transparently, and safely. With your personal card number and corresponding PIN you can check your current balance and statement at any time.

Services by card. This is how it's done.

The card number and PIN are printed on the back of the Automation Value Card. When you first receive your card, the PIN is hidden under a scratch field which ensures that nothing has been debited to your card.

By entering the card number and PIN you have full access to the Service & Support services being offered. The charge for the services procured is debited from the credits on your Automation Value Card.

All the services offered are marked in currency-neutral credits, so you can use the Automation Value Card worldwide.

Automation Value Card order numbers	
Credits	Order no.
200	**6ES7 997-0BA00-0XA0**
500	**6ES7 997-0BB00-0XA0**
1000	**6ES7 997-0BC00-0XA0**
10000	**6ES7 997-0BG00-0XA0**

Detailed information on the services offered is available on our Internet site at:

http://www.siemens.com/automation/service&support

Service & Support à la Card: Examples

Technical Support	
"Priority"	Priority processing for urgent cases
"24 h"	Availability round the clock
„Extended"	Technical consulting for complex questions
Support Tools in the Support Shop	
"System Utilities"	Tools that can be used directly for configuration, analysis and testing
"Applications"	Complete topic solutions including ready-tested software
"Functions & Samples"	Adaptable blocks for accelerating your developments

A

Subject index

	Page
A	
A&D in the WWW	A/6
A&D Mall	A/6
Abnormal frequencies	2/11
Abnormal voltages	2/11
Accessories	Section 8
Aluminium housing	3/2 to 3/11, 4/2
Anti-condensation heating	2/17
Appendix	Section A
Approvals	6/4
Automation Value Card	A/7
Axial loads	2/40 to 2/43
B	
Balance	2/27
Bearing diagrams	2/34 to 2/35
Bearing selection	2/30 to 2/33
Bearing service life	2/29
Bearing shields	6/5
Bearing system	2/30
Bearings	2/29 to 2/35, 2/44, 6/5
Bearings for increased cantilever forces	2/37
Brakes	2/50 to 2/55
C	
Cable entry	2/9
Cantilever forces	2/36 to 2/39
Cast iron housings	3/12 to 3/20, 4/3 to 4/5
CEMEP	3/2, 3/5, 3/12, 3/16
Certificates	6/3
Certification	4/7, 5/7, 6/15
Certification procedure	6/4
Circuit	2/18 to 2/22
Classification societies	6/2
COMBIMASTER 411	2/46, A/3
Condensation water holes (degrees of protection)	2/23
Conditions of sale	A/14
Conditions of sale and delivery	A/14
Configuration of brake motors	2/55
Connection	2/18 to 2/22
Connection method	65/5
Connection of motors	2/44
Converter mounting	3/27
Converter-fed operation	2/44
Coolant temperature	2/14, 2/15
Cooling	2/23
Coupling to gearboxes	2/23
Couplings	8/2
CSA approval	2/8
Currents	2/10 to 2/12
Customized motors	A/4
D	
Degrees of protection	2/23
Design and certification of explosion-proof motors in accordance with directive 94/9/EC (ATEX)	2/9
Designs	2/3, 2/4
Dimension sheet generator	7/1
Dimensions	2/56, 2/57, Section 7
Direction of rotation	2/24
Distributed drive systems	2/46 to 2/47, 3/26
Double pole-changing	3/9, 3/10
Driving fans	3/10, 3/11
E	
ECOFAST	2/46
EEx de IIC	Section 5
EEx e II	Section 4
eff1	3/5, 3/17
eff2	3/2, 3/12, 3/13
Efficiency	2/16
Electrical design	2/10 to 2/22
Electronic Catalogue SD 01	2. Inside cover, 2/6
Encoder mounting	8/2
Energy Efficiency Verification	2/8
Energy Policy Act	2/8
Energy-saving motors	3/2 to 3/6, 3/12 to 3/17
Energy-saving motors with European efficiency classification to EU/CEMEP	2/8
Energy-saving range	2/6
Environment	A/1
EPACT	3/6, 3/18
Ex zones	3/26
Explosion-proof enclosure	Section 5
Explosion-proof enclosure "d"	2/9
Export of low voltage motors to China	2/7
Export regulations	A/14
Eyebolts	2/24
F	
F200	6/7 to 6/10
F300	6/7 to 6/10
F400	3/9 to 3/11, 6/11 to 6/14
Forced-air cooled motors	6/7, 6/8, 6/11, 6/12
Foundation blocks	8/2
Frame design	2/23
Frequencies	2/10 up to 2/12
Frequency	6/4
Further external mountings for 1LA/1LG motors	2/58 to 2/59
G	
General information	2/2 to 2/6
Grease life	2/44
H	
Hazardous areas	2/9
Heat extraction machinery	6/4
High Efficiency	3/5, 3/17
Higher efficiency	6/3
I	
Improved Efficiency	3/2, 3/12, 3/13
Increased coolant air temperature	6/3
Increased output	3/8, 3/20
Increased safety	Section 4
Increased safety "e"	2/9
Installation altitude	2/14, 2/15
Insulation	2/17, 2/44
Insulation arrangement	6/4
Interactive catalogues	A/6
Internet links	2/6
Introduction	1/2 to 1/5
K	
Knowledge base on CD-ROM	A/7
L	
Lubricants	6/5
M	
Marine motors	6/2, 6/3
Marine version	3/26, 4/7, 5/7
Maximum axial loading	2/40 to 2/43
Maximum cantilever forces	2/36 to 2/39
Maximum load on the shaft end	6/6
Mechanical design	2/23 to 2/43, 3/27, 4/7, 5/7, 6/15, 6/2
Mechanical limit speeds	2/45
Mechanical stress	2/44
MICROMASTER	A/2, A/3
MICROMASTER 411	2/46
MICROSTARTER	2/47
Minimum air quantities	6/5
Minimum efficiency levels	2/8
Modular technology	2/48 to 2/57, 3/27, 8/2

A

Subject index

	Page
Motor protection	2/17, 3/25, 4/6, 5/6, 6/15, 6/3
Motor series	6/4
Motor temperature detection	2/17, 2/44
Motors for the U.S. market	2/8
Mountings	3/27
Mountings for 1LA/1LG motors	2/58 to 2/59
N	
National standards	2/7
NEMA	2/8
Noise for mains-fed operation	2/28
Noise generation	2/44
Notes on commissioning	3/28, 6/15
Notes on safety	3/28, 6/15
Notes on the dimensions	7/1
Number of poles	6/4
O	
Online Support	A/7
Operating mode	6/4
Operation with SIMOVERT MASTERDRIVES	3/21 to 3/24
Optimization	A/7
Order No.	2/2
Ordering data	Sections 3, 4, 5, 6
Output tables	2/13, 2/14
Outputs	2/13 to 2/15
Overview of "Special designs"	2/3, 2/4
P	
Packaging	2/5
Packaging dimensions	2/5
Packaging weights	2/5
Paint finish	2/5, 3/25, 4/6, 5/6, 6/15, 6/3, 6/5
Power factor	2/16
Prelubrication	2/29
Project engineering	A/7
Project planning aids	2/6
R	
Rated currents	2/12 to 2/13
Rated output	6/4
Rated torque	2/16
Rating plates	2/15
Recycling	A/1
Regulations	2/7 to 2/9, 6/2, 6/4
Repair	A/7
Resources	A/1
Restarting	2/17
Rotary pulse encoder 14XP8 001	2/48
Rotary pulse encoder HOG10 D 1024 I	2/59
Rotary pulse encoder HOG9 D 1024 I	2/59
Rotary pulse encoder LL 861 900220	2/58
S	
SD 01	2. Inside cover, 2/6
SD Configurator	2. Inside cover, 2/6
Sector solutions	Section 6
Selection data	Sections 3, 4, 5, 6
Self-cooled motors	6/9, 6/10, 6/13, 6/14
Separately driven fan	2/49
Service & Support	A/7
Service locally	A/7
Shaft extensions	2/27
SIMOVERT MASTERDRIVES	3/21 to 3/24
Slide rails and tensioning screws	8/2
Smoke extraction machinery	6/4
Smoke extraction motors	6/4 to 6/15
Software engineering	A/7
Spare parts	A/7, Section 8
Special designs	2/3, 2/4, 3/25 to 3/28, 4/6 to 4/7, 5/6 to 5/7, 6/15
Speed	2/24
Speed limits	2/45
Spring-operated brake	2/53, 2/54
Squirrel-cage motors 1LA, 1LG	Section 3
Squirrel-cage motors 1MA	Section 4
Squirrel-cage motors 1MJ	Section 5
Standard voltages	2/10
Standards	2/7 to 2/9, 6/2, 6/4
Standards and specifications	2/7
Supervised construction approvals	6/4
T	
Taper pins	8/2
Technical Consulting	A/7
Technical design	6/4
Technical information	Section 2
Technical Support	A/7
Temperature sensor	2/17
Temperature/time class F200	6/7 to 6/10
Temperature/time class F300	6/7 to 6/10
Temperature/time class F400	6/11 to 6/14
Terminal boxes	2/18 to 2/22
Tolerances	2/7 to 2/9
Tolerances for electrical data	2/7
Trade marks	2. Inside cover
Triple pole-changing	3/11
Types of construction	2/25 to 2/26
Type of protection "n"	2/9
Type of protection EEx de IIC	2/9, Section 5
Type of protection EEx e II	2/9, Section 4
U	
UL approval	2/8
Upgrading	A/7
Use in smoke and heat extraction machinery	6/4
Useful Internet links	2/6
V	
Ventilation	2/23, 2/44
Vibration severity	2/27
VIK design	2/9
Voltage	6/4
Voltages	2/10 to 2/12
W	
Water drain holes	6/5
Weights	2/57
Winding protection	6/3
Windings	2/17, 3/25, 4/6, 6/15

Order number index

Order No.	Page
1LA5	
1LA5 18.	3/2, 3/3, 3/9, 3/10, 3/11, 3/22, 6/9, 6/10
1LA5 20.	3/2, 3/3, 3/9, 3/10, 3/11, 3/22, 6/9, 6/10
1LA5 22.	3/2, 3/3, 3/22, 6/9, 6/10
1LA6	
1LA6 10.	3/12, 3/13, 3/14, 3/15, 6/13, 6/14
1LA6 11.	3/12, 3/13, 3/14, 3/15, 6/13, 6/14
1LA6 13.	3/12, 3/13, 3/14, 3/15, 6/13, 6/14
1LA6 16.	3/12, 3/13, 3/14, 3/15, 6/13, 6/14
1LA7	
1LA7 05.	3/2
1LA7 06.	3/2, 3/3, 3/9
1LA7 07.	3/2, 3/3, 3/9
1LA7 08.	3/2, 3/3, 3/9, 3/10, 6/9, 6/10
1LA7 09.	3/2, 3/3, 3/9, 3/10, 3/11, 6/9, 6/10
1LA7 10.	3/2, 3/3, 3/9, 3/10, 3/11, 3/22, 6/9, 6/10
1LA7 11.	3/2, 3/3, 3/9, 3/10, 3/11, 3/22, 6/9, 6/10
1LA7 13.	3/2, 3/3, 3/9, 3/10, 3/11, 3/22, 6/9, 6/10
1LA7 16.	3/2, 3/3, 3/9, 3/10, 3/11, 3/22, 6/9, 6/10
1LA8	
1LA8 31.	3/12, 3/13, 3/14, 3/15
1LA8 31.	3/21, 3/23, 3/24
1LA8 35.	3/12, 3/13, 3/14, 3/15
1LA8 35.	3/21, 3/23, 3/24
1LA8 40.	3/12, 3/13, 3/14, 3/15
1LA8 40.	3/21, 3/23, 3/24
1LA8 45.	3/12, 3/13, 3/14, 3/15
1LA8 45.	3/21, 3/23, 3/24
1LA9	
1LA9 05.	3/4, 3/6, 3/8
1LA9 06.	3/4, 3/6, 3/8
1LA9 07.	3/4, 3/6, 3/8
1LA9 08.	3/4, 3/6, 3/8
1LA9 09.	3/4, 3/5, 3/6, 3/7, 3/8
1LA9 10.	3/4, 3/5, 3/6, 3/7, 3/8
1LA9 11.	3/4, 3/5, 3/6, 3/7, 3/8
1LA9 13.	3/4, 3/5, 3/6, 3/7, 3/8
1LA9 16.	3/4, 3/5, 3/6, 3/7, 3/8
1LA9 18.	3/4, 3/5, 3/6, 3/7, 3/8
1LA9 20.	3/4, 3/5, 3/6, 3/7, 3/8
1LG4	
1LG4 18.	3/12, 3/13, 3/14, 3/15, 3/20
1LG4 20.	3/12, 3/13, 3/14, 3/15, 3/20
1LG4 22.	3/12, 3/13, 3/14, 3/15, 3/20
1LG4 25.	3/12, 3/13, 3/14, 3/15, 3/20
1LG4 28.	3/12, 3/13, 3/14, 3/15, 3/20
1LG4 31.	3/12, 3/13, 3/14, 3/15

Order No.	Page
1LG6	
1LG6 18.	3/16, 3/17, 3/18, 3/19, 3/23, 3/24, 6/13, 6/14
1LG6 20.	3/16, 3/17, 3/18, 3/19, 3/23, 3/24, 6/13, 6/14
1LG6 22.	3/16, 3/17, 3/18, 3/19, 3/23, 3/24, 6/13, 6/14
1LG6 25.	3/16, 3/17, 3/18, 3/19, 3/23, 3/24, 6/9, 6/10, 6/13, 6/14
1LG6 28.	3/16, 3/17, 3/18, 3/19, 3/23, 3/24, 6/9, 6/10, 6/13, 6/14
1LG6 31.	3/16, 3/17, 3/18, 3/19, 3/23, 3/24, 6/9, 6/10, 6/13, 6/14
1MA6	
1MA6 10.	4/3, 4/4, 4/5
1MA6 11.	4/3, 4/4, 4/5
1MA6 13.	4/3, 4/4, 4/5
1MA6 16.	4/3, 4/4, 4/5
1MA6 18.	4/3, 4/4, 4/5
1MA6 20.	4/3, 4/4, 4/5
1MA6 22.	4/3, 4/4, 4/5
1MA6 25.	4/3, 4/4, 4/5
1MA6 28.	4/3, 4/4, 4/5
1MA6 31.	4/3, 4/4, 4/5
1MA7	
1MA7 06.	4/2
1MA7 07.	4/2
1MA7 08.	4/2
1MA7 09.	4/2
1MA7 10.	4/2
1MA7 11.	4/2
1MA7 13.	4/2
1MA7 16.	4/2
1MJ1	
1MJ1 35.	5/2, 5/3, 5/4, 5/5
1MJ1 40.	5/2, 5/3, 5/4, 5/5
1MJ1 45.	5/2, 5/3, 5/4, 5/5
1MJ6	
1MJ6 07.	5/2, 5/3, 5/4
1MJ6 08.	5/2, 5/3, 5/4
1MJ6 09.	5/2, 5/3, 5/4, 5/5
1MJ6 10.	5/2, 5/3, 5/4, 5/5
1MJ6 11.	5/2, 5/3, 5/4, 5/5
1MJ6 13.	5/2, 5/3, 5/4, 5/5
1MJ6 16.	5/2, 5/3, 5/4, 5/5
1MJ6 18.	5/2, 5/3, 5/4, 5/5
1MJ6 20.	5/2, 5/3, 5/4, 5/5
1MJ7	
1MJ7 22.	5/2, 5/3, 5/4, 5/5
1MJ7 25 .	5/2, 5/3, 5/4, 5/5
1MJ7 28.	5/2, 5/3, 5/4, 5/5
1MJ7 31.	5/2, 5/3, 5/4, 5/5
1MJ8	
1MJ8 31.	5/2, 5/3, 5/4, 5/5
1MJ8 35.	5/2, 5/3, 5/4, 5/5
1PP5	
1PP5 18.	6/7, 6/8
1PP5 20.	6/7, 6/8
1PP5 22.	6/7, 6/8

A

Order number index

Order No.	Page
1PP6	
1PP6 10.	6/11, 6/12
1PP6 11.	6/11, 6/12
1PP6 13.	6/11, 6/12
1PP6 16.	6/11, 6/12
1PP6 18.	6/11, 6/12
1PP6 20.	6/11, 6/12
1PP6 22.	6/11, 6/12
1PP6 25.	6/7, 6/8, 6/11, 6/12
1PP6 28.	6/7, 6/8, 6/11, 6/12
1PP6 31.	6/7, 6/8, 6/11, 6/12

Order No.	Page
1PP7	
1PP7 08.	6/7, 6/8
1PP7 09.	6/7, 6/8
1PP7 10.	6/7, 6/8
1PP7 11.	6/7, 6/8
1PP7 13.	6/7, 6/8
1PP7 16.	6/7, 6/8

Notes

Conditions of sale and delivery
Export regulations

Terms and Conditions of Sale and Delivery

By using this catalogue you can acquire hardware and software products described therein from the Siemens AG subject to the following terms. Please note! The scope, the quality and the conditions for supplies and services, including software products, by any Siemens entity having a registered office outside of Germany, shall be subject exclusively to the General Terms and Conditions of the respective Siemens entity.

for customers with a seat or registered office in Germany

The General Terms of Payment as well as the General Conditions for the Supply of Products and Services of the Electrical and Electronics Industry shall apply.

For software products, the General License Conditions for Software Products for Automation and Drives for Customers with Seat or registered Office in Germany shall apply.

for customers with a seat or registered office outside of Germany

The General Terms of Payment as well as the General Conditions for Supplies of Siemens, Automation and Drives for Customers with a Seat or registered Office outside of Germany shall apply.

For software products, the General License Conditions for Software Products for Automation and Drives for Customers with Seat or registered Office outside of Germany shall apply.

General

The prices are in € (Euro) ex works, exclusive packaging.

The sales tax (value added tax) is not included in the prices. It shall be debited separately at the respective rate according to the applicable legal regulations.

In addition to the prices of products which include silver and/or copper, surcharges may be calculated if the respective limits of the notes are exceeded.

Prices are subject to change without prior notice. We will debit the prices valid at the time of delivery.

The dimensions are in mm. Illustrations are not binding.

Insofar as there are no remarks on the corresponding pages, - especially with regard to data, dimensions and weights given - these are subject to change without prior notice.

Comprehensive Terms and Conditions of Sale and Delivery are available free of charge from your local Siemens business office under the following Order Nos.:

- 6ZB5310-0KR30-0BA0
  (for customers based in the Federal Republic of Germany)
- 6ZB5310-0KS53-0BA0
  (for customers based outside of the Federal Republic of Germany)

or download them from the Internet:
www.siemens.com/automation/mall
(Germany: A&D Mall Online-Help System)

A

Export regulations

The products listed in this catalogue may be subject to European/German and/or US export regulations.

Therefore, any export requiring a license is subject to approval by the competent authorities.

According to current provisions, the following export regulations must be observed with respect to the products featured in this catalogue:

AL	Number of the German Export List. Products marked other than "N" require an export license. In the case of software products, the export designations of the relevant data medium must also be generally adhered to. Goods labeled with an "AL not equal to N" are subject to a European or German export authorization when being exported out of the EU.
ECCN	Export Control Classification Number. Products marked other than "N" are subject to a reexport license to specific countries. In the case of software products, the export designations of the relevant data medium must also be generally adhered to. Goods labeled with an "ECCN not equal to N" are subject to a US re-export authorization.

Even without a label or with an "AL: N" or "ECCN: N", authorization may be required due to the final destination and purpose for which the goods are to be used.

The deciding factors are the AL or ECCN export authorization indicated on order confirmations, delivery notes and invoices.

Errors excepted and subject to change without prior notice.

Responsible for

Technical contents:
Siemens AG, A&D SD SM

General editing:
Siemens AG, A&D PT 5, Erlangen

Siemens AG
Automation & Drives
Standard Drives
P.O. Box 32 69
D-91050 Erlangen

Order No.:
E86060-K1711-A101-A3-7600
Printed in Germany
KG K 1203 25.0 E 176 En/422201

Catalogues of the Automation and Drives Group (A&D)

Further information can be obtained from our branch offices listed in the appendix of this catalogue

Automation & Drives	*Catalogue*
Interactive catalog on CD-ROM	
• Components for Automation & Drives	CA 01

Automation Systems for Machine Tools	
SINUMERIK & SIMODRIVE	NC 60
Cables, Connectors and System Components	NC Z

Drive Systems	
Variable-Speed Drives	
DC Motors	DA 12
DC Drives Preferred Series up to 500 kW	DA 12.1
DC Drives Preferred Series 215 kW to 1500 kW	DA 12.2
SIMOREG DC MASTER 6RA70 Digital Chassis Converters	DA 21.1
SIMOREG K 6RA22 Analog Chassis Converters	DA 21.2
SIMOREG DC MASTER 6RM70 Digital Converter Cabinet Units	DA 22
SIMOVERT PM Modular Converter Systems	DA 45
SIEMOSYN Motors	DA 48
MICROMASTER 410/420/430/440 Inverters	DA 51.2
MICROMASTER 411/COMBIMASTER 411	DA 51.3
SIMOVERT MV Medium-Voltage Drives	DA 63
SIMOVERT MASTERDRIVES Vector Control	DA 65.10
SIMOVERT MASTERDRIVES Motion Control	DA 65.11
Synchronous and asynchronous servomotors for SIMOVERT MASTERDRIVES	DA 65.3
SIMODRIVE 611 universal and POSMO	DA 65.4
Low-Voltage Three-Phase-Motors	
Project Manual	M 10
Squirrel-Cage Motors, Totally Enclosed, Fan-Cooled	M 11
Automation Systems for Machine Tools SIMODRIVE	NC 60
• AC Main Spindle Motors 1PM, 1FE, 1PH	
• AC Servomotors 1FT, 1FK	
• AC Linear motors 1FN	
• Converter System SIMODRIVE 611	
• Converter Systems SIMODRIVE POSMO A/CD/CA/SI	
Drive and Control Components for Hoisting Equipment	HE 1

Electrical Installation Technology	
PDF: ALPHA Small Distribution Boards and Distribution Boards	*ET A1*
PDF: ALPHA Side-by-Side Switchgear Cabinets	*ET A3*
PDF: BETA Modular Installation Devices	*ET B1*
PDF: DELTA Switches and Outlets	*ET D1*
PDF: GAMMA Building Management Systems	*ET G1*

Human Machine Interface Systems SIMATIC HMI	ST 80

Industrial Communication and Field Devices	IK PI

Low-Voltage Controls and Distribution	*Catalogue*
Low-Voltage Controlgear, Switchgear and Systems	NS K
Communication-Capable Controlgear, Controlgear with SIRIUS, SIGUARD Safety Systems, Control and Signalling Devices, Switchgear, Transformers and DC Power Supplies, Main- and EMERGENCY-STOP Switches, Control Switches, Terminal Blocks	
BERO - Sensors for Automation	NS BERO
Products and Systems for Low-Voltage Power Distribution	NS PS
SENTRON WL	NS WL

Motion Control System SIMOTION	PM 10

Process Instrumentation and Analytics	
Field Instruments for Process Automation Measuring Instruments for Pressure, Differential Pressure, Flow, Level and Temperature, Positioners and Liquid Meters	FI 01
PDF: Indicators for panel mounting	*MP 12*
SIREC Recorders and Accessories	MP 20
SIPART, Controllers and Software	MP 31
SIWAREX Weighing Systems	WT 01
Continuous Weighing and Process Protection	WT 02
Gas Analysis Equipment for the Process Industry	PA 10
PDF: Process Analytics, Components for the System Integration	*PA 11*
SIPAN Liquid Analysis	PA 20

SIMATIC Industrial Automation Systems	
SIMATIC PCS Process Control System	ST 45
PDF: SIMATIC S5/505 Automation Systems	*ST 50*
Components for Totally Integrated Automation and Micro Automation	ST 70
SIMATIC PCS 7 Process Control System	ST PCS 7
PDF: Add-ons for the SIMATIC PCS 7 Process Control System	*ST PCS 7.A*
SIMATIC Control Systems	ST DA

SIPOS Electric Actuators	
Electric Rotary, Linear and Part-turn Actuators	MP 35
Electric Rotary Actuators for Nuclear Plants	MP 35.1/.2

Systems Engineering	
Power supplies SITOP power	KT 10.1
System cabling SIMATIC TOP connect	KT 10.2
MOBY Identification Systems	KT 21
Industrial Microcomputers SICOMP	KT 51

System Solutions

Applications and Products for Industry are part of the interactive catalog CA 01

TELEPERM M Process Control System	
AS 235, AS 235H and AS 235K automation systems	PLT 111
PDF: AS 488/TM automation systems	*PLT 112*
Operating and monitoring with WinCC/TM	PLT 123
CS 275 bus system	PLT 130

PDF: These catalogues are only available as pdf files.

The information provided in this catalogue contains descriptions or characteristics of performance which in case of actual use do not always apply as described or which may change as a result of further development of the products. An obligation to provide the respective characteristics shall only exist if expressly agreed in the terms of contract. Availability and technical specifications are subject to change without notice.

Siemens AG

Automation and Drives
Standard Drives
Postfach 32 69, D-91050 Erlangen

www.siemens.com/motors

Order No. E86060-K1711-A101-A3-7600

SIEMENS

Low-Voltage Motors

Catalogue M 11 · 2003/2004